Single frequency upconverted laser generation by phase summation

Xin Zeng[1,2], Shuzhen Cui[2], Huawei Jiang[2], Bowen Ruan[1,2], Xin Cheng[1,2], Jiaqi Zhou[2], Zhiquan Lin[1,2], Xuezong Yang[1], Weibiao Chen[1,2], and Yan Feng[1,2]

[1]*Hangzhou Institute for Advanced Study, University of Chinese Academy of Sciences, Hangzhou, 310024, China*

[2]*Shanghai Institute of Optics and Fine Mechanics, Chinese Academy of Sciences, Shanghai, 201800, China*

Abstract

Phase summation effect in sum-frequency mixing process is utilized to avoid a nonlinearity obstacle in power scaling of single frequency visible or ultraviolet lasers. Two single-frequency fundamental lasers are spectrally broadened by phase modulation to suppress stimulated Brillouin scattering in fiber amplifier and achieve higher power. After sum-frequency mixing in a nonlinear optical crystal, the upconverted laser returns to single frequency due to phase summation, when the phase modulations on two fundamental lasers have the similar amplitude but opposite sign. The method was experimentally proved in a Raman fiber amplifier based laser system, which generated power-scalable sidebands-free single-frequency 590 nm laser. The proposal manifests the importance of phase operation in wave-mixing processes for precision laser technology.

Keywords: high power; phase summation; single-frequency laser; stimulated Brillouin scattering; sum-frequency generation

1. Introduction

High-power single-frequency upconverted lasers at visible or ultraviolet wavelengths generated by frequency mixing[1], such as sum-frequency generation (SFG) and second-harmonic generation (SHG), are ubiquitous in scientific research and technology development[2–6]. Single-pass frequency mixing of near-infrared fiber lasers provides an efficient, compact and robust solution[7–10]. The power of single-frequency upconverted lasers is usually limited by the corresponding fundamental lasers, because single-frequency fiber amplifiers are susceptible to stimulated Brillouin scattering (SBS)[11–13], especially for Raman fiber amplifiers[14]. Phase modulation provides an elegant method to control the spectrum of the laser signal for SBS suppression. It has been widely used and plays a vital role in fiber laser power scaling[15,16]. In this way, kilowatt narrow linewidth green laser was achieved by frequency doubling of a high power Yb fiber amplifier[10]. However, the phase modulated laser is not single-frequency anymore, which is undesirable for many precision applications.

We had proposed a method of compressing phase modulated laser back to single-frequency utilizing the phase doubling effect in SHG[17]. With the method, a robust 20-W continuous-wave single frequency 589 nm laser was developed for sodium guide star in astronomy[18]. Nevertheless, the method requires π-depth binary phase modulation, e. g. square wave and pseudo random binary sequences. The generation of such ideal modulation needs infinite bandwidth. The limited bandwidth in practice results in signal distortion, which induces residual phase modulation in the single-frequency SHG output and reduces the spectral purity.

In this paper, we introduce a new method avoiding the bandwidth challenge and allowing high spectral purity upconverted single-frequency laser generation, utilizing the phase summation effect in SFG process. When two fundamental lasers carrying phase modulation of identical amplitude but opposite sign are mixed in a nonlinear crystal, the upconverted laser returns to single frequency because the phase modulations cancel each other. In the demonstration, sinusoidal modulation of same frequency and similar amplitude is applied to two fundamental lasers for SBS suppression during fiber amplification. By adjusting the relative phase between two modulations, single-frequency upconverted laser is generated.

Correspondence to: Address of corresp. Email: feng@siom.ac.cn

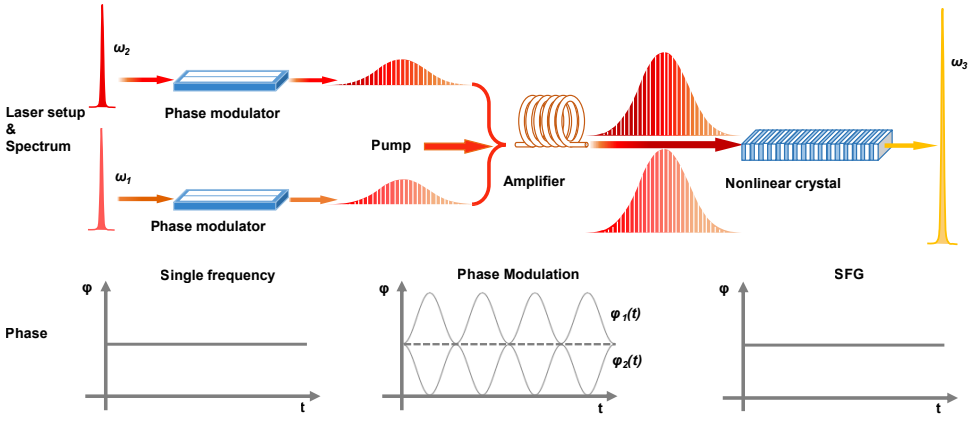

Figure 1. The concept of phase summation in SFG for single-frequency upconverted laser generation. The spectral and phase evolution at different stages of laser are schematically illustrated.

2. Theory and Method

The concept of single-frequency upconverted laser generated by utilizing the phase summation effect is illustrated in Fig. 1. Two single-frequency seed lasers are phase modulated to have a broader spectrum, so as to reduce the spectral density and suppress SBS in following fiber amplifier. The electric field strength of two phase-modulated lasers can be expressed as [19]

$$\tilde{E}_n(t) = E_n e^{-i[\omega_n t + \varphi_n(t)]} + c.c.\,, \tag{1}$$

where $n = 1, 2$ for two lasers, respectively, E_n are the field amplitude, ω_n are the laser frequency, and $\varphi_n(t)$ are the phase modulation function. The SFG component of the second order nonlinear polarization is given by

$$\tilde{P}^{(2)}(\omega_1 + \omega_2) = 2\varepsilon_0 \chi^{(2)} E_1 E_2 \cdot e^{-i\{(\omega_1+\omega_2)t + [\varphi_1(t)+\varphi_2(t)]\}} + c.c.\,, \tag{2}$$

where ε_0 is the permittivity of free space, $\chi^{(2)}$ is the 2th-order nonlinear optical susceptibility. As seen in (2), the generated $\omega_1 + \omega_2$ field has a phase-modulation term of $\varphi_1(t) + \varphi_2(t)$, which is the sum of the phase modulations applied on two fundamental lasers. Here we are interested in a special case, where $\varphi_1(t) + \varphi_2(t)$ equals to a constant value. In this case, the phase modulations on the fundamental lasers are cancelled out during SFG, thus a single frequency upconverted laser is generated in spite of broad input lasers.

Any modulation functions with opposite signs can do the trick. Here sinusoidal modulation is used in the experimental demonstration, because it is the simplest and most basic function. Any periodic functions can be expanded in Fourier series. The phase evolution of lasers with sinusoidal modulation for single-frequency SFG is illustrated in Fig. 1. As long as the two sine-wave functions have the same amplitude and are anti-phase, single-frequency laser can be generated as a SFG output.

3. Results and discussion

3.1. SBS suppression in Raman fiber amplifier

The experimental setup includes two phase-modulated seed lasers, a two-stage Raman fiber amplifier, and a frequency mixing unit, as shown in Fig. 2. It has the same configuration as reported in [18], except that one seed laser is replaced by two seed lasers. The seed lasers are fiber-pigtailed distributed feedback (DFB) diode lasers around 1180 nm, whose wavelengths are thermally tunable. The linewidths were measured to be 380 kHz and 120 kHz, respectively. Both seed lasers are protected by isolators and phase modulated by electro-optic phase modulators (EOMs) with 10 GHz bandwidth. After that, they are coupled in a two-stage linearly polarized Raman fiber amplifier via a 50:50 coupler.

Two signal lasers could be amplified separately and combined afterwards for sum-frequency mixing. In the experiments, a single Raman fiber amplifier was used, which takes less resource. However, co-amplification in the same amplifier leads to a complication. We observed cascaded four wave mixing (FWM) of the signal lasers when their wavelengths were close, which significantly broadened the linewidth of the amplified output. The linewidth can easily exceed the acceptance of the nonlinear optical crystal, which is a 30-mm-long PPSLT crystal. In order to suppress FWM, the wavelengths of two seed lasers were tuned apart thermally, but kept within the gain band of the Raman amplifier. At the same time, the amplified output should have similar power at two wavelengths, which is necessary for optimizing the SFG efficiency. The wavelengths were tuned to 1178.3 nm and 1183.2 nm in the formal experiments.

Turning on the amplifier with the single frequency seed lasers, SBS quickly limited the performance. The backward

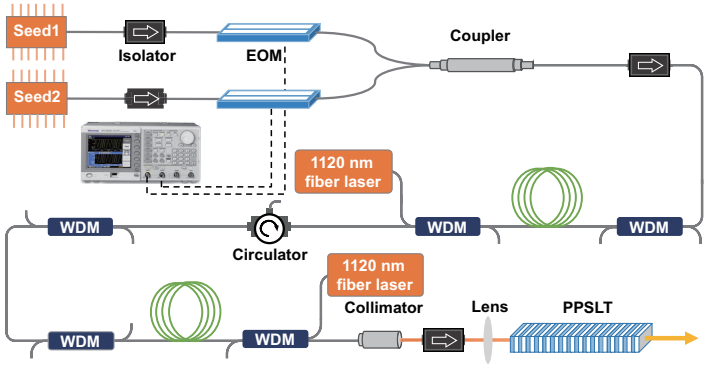

Figure 2. The experimental setup includes two phase-modulated seed lasers, a two-stage Raman fiber amplifier, and a frequency mixing unit. EOM: the electro-optic phase modulator, WDM: wavelength division multiplexer.

SBS light was already 0.38 W, when the amplifier output was only 4 W. Sinusoidal modulation of 100 MHz frequency was then applied to two signal lasers to suppress SBS. The frequency was selected to be higher than the SBS bandwidth, which is about 50 MHz. The sine-waves were generated from a signal generator (Tektronix, AFG3102) with equal frequency, tunable phase offset, and adjustable amplitude up to 10 V. Fig. 3(a) shows the spectra of the single-frequency and phase-modulated lasers measured by a 4 GHz Fabry–Pérot interferometer (FPI, TOPTICA Photonics). Discrete sidebands are generated at both sides of the carrier frequencies. The separation between the frequency components is the sinusoidal modulation frequency, and the power distribution between the carrier and sidebands is determined by modulation depth. Larger modulation depth means more sidebands, resulting in a lower spectral intensity, which is beneficial for SBS suppressing. Two EOMs and their drivers have different response to applied radio frequency signal. The maximum equal modulation depth achieved in the experiments was about 1.93π, whose value is determined by comparing with numerical simulation.

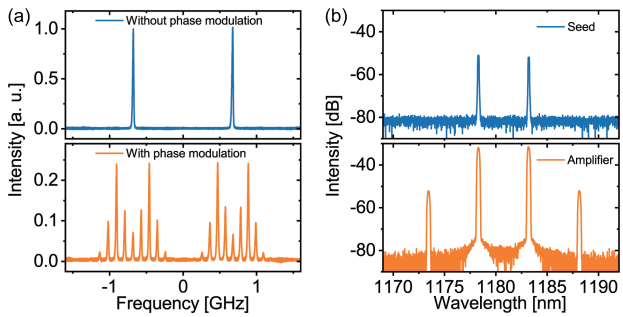

Figure 3. Spectra of the fundamental lasers. (a) Spectra of two single-frequency and phase-modulated lasers measured with FPI. (b) Optical spectra of seed lasers and main amplifier.

The amplifier was tested firstly with single phase modulated seed laser. The SBS-limited outputs at 1178.3 nm and 1183.2 nm were 16 W and 15.4 W, respectively. With both seeds, the SBS-limited output increased to 45.2 W, corresponding to 87.6 W pump power at 1120 nm, where the backward light power was 0.22 W, as shown in Fig. 4. So $>$ 11 times SBS suppression was achieved. The improved SBS suppression in dual seed case as compared to single seed case is due to the change of signal power distribution along the amplifier, which determines the exact SBS gain. The spectra of phase modulated seed lasers and main amplifier were measured by an optical spectrum analyzer with a resolution of 0.1 nm, as shown in Fig. 3(b). It is seen that the spectral intensity difference between two wavelengths is only about 0.26 dB. And FWM is well suppressed when wavelength separation of two seed lasers is 4.9 nm. Two FWM-caused lines are still observed at 1173.4 nm and 1188.1 nm, respectively, but they are 22 dB lower than the 1178.3 nm and 1183.2 nm laser lines.

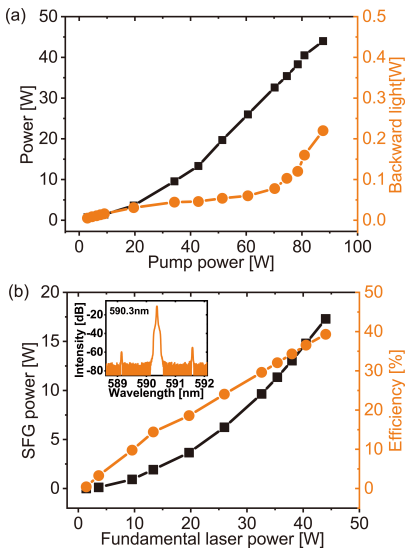

Figure 4. Power curves of fundamental Raman amplifier and upconverted single frequency laser by sum frequency generation. (a) The output and backward light power of Raman fiber amplifier as a function of 1120 nm pump power. (b) The power and conversion efficiency of single-frequency upconverted laser as a function of fundamental laser power. Insert: spectrum of the generated 590.3 nm laser.

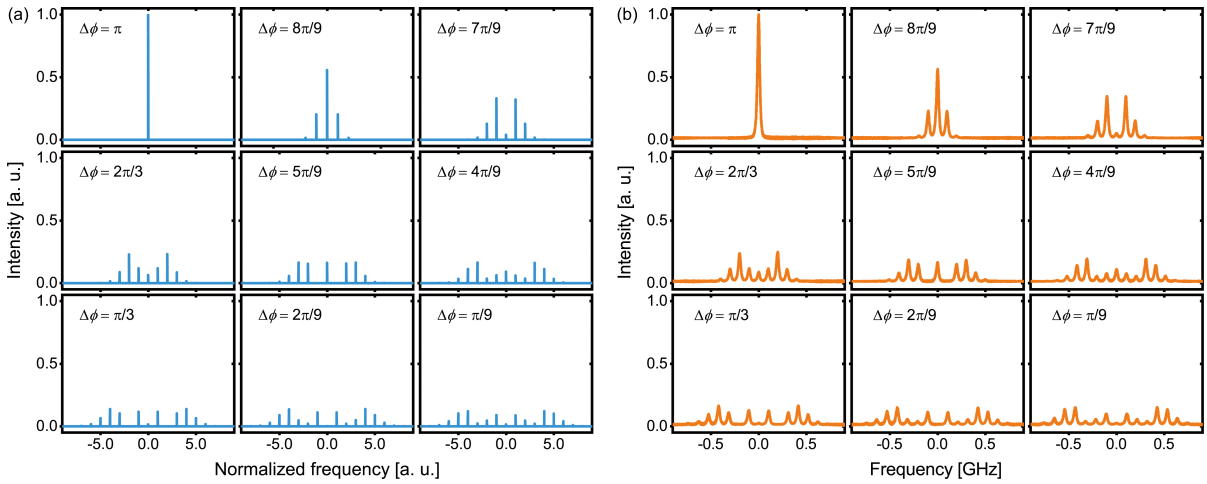

Figure 5. The spectral evolution of upconverted lasers at different phase offset between sinusoidal signals. (a) The simulated spectra of upconverted lasers. (b) The measured spectra with a FPI. The intensity is normalized by the intensity of single-frequency case.

3.2. Single frequency upconverted laser generation

According to the analysis above, to get a single-frequency laser after SFG, the depth of phase modulation upon two signal lasers should be the same, and the relative phase between the sine-wave modulations should be π. The fine spectra of phase modulated laser and their SFG were simulated numerically. Results on the spectra of the upconverted laser with different phase offset $\Delta\phi$ are shown in Fig. 5(a), where the modulation depth is set to the experimentally determined 1.93π. In the process of phase-modulated laser SFG, when $\Delta\phi$ is close to 0 or an integral multiple of 2π, the resulting upconverted laser has a wider spectrum than the fundamental lasers. When $\Delta\phi$ is π, the upconverted laser becomes single-frequency in spite of the multi-line fundamental lasers.

The effect of phase offset was investigated experimentally by adjusting the offset between two sine-wave signals and measuring the fine spectra of the SFG output with a FPI. Fig. 5(b) shows the measured spectra at different phase offset. The phase offset contribution due to optical path difference of two amplifiers has been deducted. Different from that in the simulated spectrum, the measured spectral lines have finite width owing to the finite resolution of the FPI. With different phase offset, the SFG output usually has multiple sidebands, but becomes single frequency at specific phase offset of π (or more generally an odd multiple of π). The spectrum behaves as predicted by the numerical simulation.

With the phase offset set as π, the output power of the Raman fiber amplifier and SFG unit were measured, whose results are plotted in Fig. 4. The power and conversion efficiency of single-frequency upconverted 590.3 nm laser is shown in Fig. 4(b). A maximum power of 17.3 W was obtained in single-pass configuration with a conversion efficiency of 39.3%. The optical spectrum at maximum power is shown in the inset of Fig. 4(b). Besides the 590.3 nm SFG line, there are lines at 589.2 nm and 591.6 nm, which are 39 dB and 41 dB lower. They are the second harmonics of 1178.3 nm and 1183.2 nm, respectively, out of phase matching condition. The phase matching temperature of the 590.3 nm SFG was found to be around $74°$C, while the temperature for the 1178.3 nm and 1183.2 nm SHG were $47°$C and $100°$C, respectively.

The fine spectrum of single-frequency upconverted laser at 590.3 nm with phase modulated fundamental lasers was compared with that without phase modulation. As shown in Fig. 6, both have clean profile and undistinguishable. The linewidth of the former is measured to be 27 MHz at the maximum power of 17.3 W, while the latter is 28 MHz with a maximum output of about 0.14 W. The difference is within the measurement error, limited by the FPI resolution. The true linewidth should be around a few hundred kHz. Notably, the upconverted laser is sideband-free, which is hard to achieve in the SHG-based phase-doubling approach[17,18]. The phase doubling approach requires modulation functions of infinite bandwidth in principle, while the present phase summation approach only requires identical function with opposite sign. In the case of sinusoidal modulation, single frequency electronic signal is applied. Therefore, as long as the signal amplitude is within the linear range of the devices, complete phase demodulation can be achieved by fine adjusting the signal amplitude and phase offset.

The output power of single-frequency upconverted laser was limited by phase modulation depth, which is required to be identical on both signal lasers. If higher phase modulation is applied, the SBS-limited fundamental lasers can be further increased and higher single-frequency upconverted laser can be generated. In the experiments, we tried tuning up both RF signals to maximum regardless of the identical depth requirement. Then the fiber amplifier output increased to 50 W under the SBS limit. The SFG output increased to 21.4 W with a conversion efficiency of 43.3%, corresponds to 101.3 W pump laser power at 1120 nm. Therefore, we believe

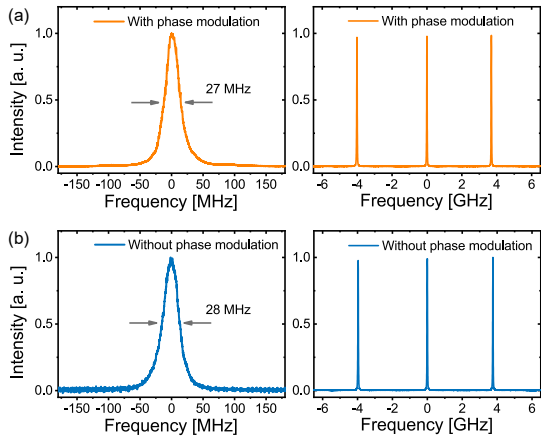

Figure 6. Spectra of upconverted output. (a) The fine spectrum and FPI scan signal of the single frequency upconverted laser with phase modulated fundamental lasers at output power of 17.3 W. (b) The fine spectrum and FPI scan signal of upconverted single-frequency laser without phase modulation.

power scaling of single-frequency upconverted laser can be readily done with dedicated electronics which achieves higher phase modulation. Another obvious extension to the technique is to use multi-tone phase modulation, which can also obtain higher SBS suppression and is beneficial for power scaling.

4. Conclusions

In conclusion, we have proposed and demonstrated a new method to achieve high power single-frequency upconverted laser generation utilizing the phase summation effect in sum frequency mixing process. Two single frequency fundamental lasers are phase modulated to suppress SBS and achieve higher amplified output. By adjusting the phase modulations on the two lasers to have the similar amplitude but opposite sign, the sum-frequency mixed laser returns to single frequency. Such phase modulation demodulation approach for high power single-frequency laser generation is analogous to the chirped pulse amplification approach for ultrafast pulsed lasers proposed by Strickland and Mourou [20], where the optical pulses are expanded before amplification to avoid nonlinear optical damage and compressed afterwards. The method was experimentally proved in a Raman fiber amplifier based yellow laser system with sinusoidal phase modulation, which generated 20-W level single frequency 590 nm laser. Compared with the SHG-based method [18], the present SFG-based method overcomes the bandwidth difficulty, and allows sidebands-free upconverted single frequency laser generation. It shows great advantage in generating high-power high-spectral-quality single-frequency visible or ultra-violet laser for high precision applications.

5. Acknowledgement

The work is partly supported by the National Natural Science Foundation of China (62075226).

References

1. Armstrong, J. A., Bloembergen, N., Ducuing, J., and Pershan, P. S., "*Interactions between Light Waves in a Nonlinear Dielectric*", Phys. Rev. **127**, 1918-1939 (1962).
2. Hänsch, T. W., "*Nobel Lecture: Passion for precision*", Rev. Mod. Phys. **78**, 1297-1309 (2006).
3. Editorial staff, "*The next step for metrology*", Nat. Photonics **5**, 185-185 (2011).
4. Meschede, D., Udem, T., and Esslinger, T., "*Exploring the World with the Laser*," (Springer Cham. Press, New York, 2018).
5. Bienfang, J. C., Denman, C. A., Grime, B. W., Hillman, P. D., Moore, G., Telle, T., and John, M., "*20W of continuous-wave sodium D2 resonance radiation from sum-frequency generation with injection-locked lasers*", Opt. Lett. **28**, 2219-2221 (2003).
6. Zhang, L., Jiang, H., Cui, S., Hu, J., and Feng, Y., "*Versatile Raman fiber laser for sodium laser guide star*", Laser Photonics Rev. **8**, 889-895 (2014).
7. Surin, A. A., Borisenko, T. E., and Larin, S. V., "*Generation of 14 W at 589 nm by frequency doubling of high-power CW linearly polarized Raman fiber laser radiation in MgO:sPPLT crystal*", Opt. Lett. **41**, 2644-2647 (2016).
8. Dixneuf, C., Guiraud, G., Ye, H., Bardin, Y., Goeppner, M., Santarelli, G., and Traynor, N., "*Robust 17 W single-pass second-harmonic-generation at 532 nm and relative-intensity-noise investigation*", Opt. Lett. **46**, 408-411 (2021).
9. Su, M., You, Y., Quan, Z., Shen, H., Li, Q., Liu, W., Qi, Y., and Zhou, J., "*321 W high-efficiency continuous-wave green laser produced by single-pass frequency doubling of narrow-linewidth fiber laser*", Appl. Opt. **60**, 3836-3841 (2021).
10. Ahmadi, P., Creeden, D., Aschaffenburg, D., Mokan, V., Underwood, M., Caprara, A., Shu, Q., Spinelli, L., Minelly, J., and Nikolov, I., "*Generating kW laser light at 532 nm via second harmonic generation of a high power Yb-doped fiber amplifier*", in *Proceedings of Nonlinear Frequency Generation and Conversion: Materials and Devices XIX*, (SPIE LASE, San Francisco, California, United States, 2020), **11264**, p. 114-119.
11. Jauregui, C., Limpert, J., and Tünnermann, A., "*High-power fibre lasers*", Nature Photonics **7**, 861-867 (2013).
12. Fu, S., Shi, W., Feng, Y., Zhang, L., Yang, Z., Xu, S., Zhu, X., Norwood, R. A., and Peyghambarian, N.,

"*Review of recent progress on single-frequency fiber lasers [Invited]*", J. Opt. Soc. Am. B. **34**, A49-A62 (2017).

13. Zeng, X., Cui, S., Cheng, X., Zhou, J., Qi, W., and Feng, Y., "*Resonant frequency doubling of phase-modulation-generated few-frequency fiber laser*", Opt. Lett. **45**, 4944-4947 (2020).
14. Zhang, L., Hu, J., Wang, J., and Feng, Y., "*Stimulated-Brillouin-scattering-suppressed high-power single-frequency polarization-maintaining Raman fiber amplifier with longitudinally varied strain for laser guide star*", Opt. Lett. **37**, 4796-4798 (2012).
15. Chu, Q., Shi, Y., Wen, J.,Ouyang, L., Zhao, L., Wang, J., Lin, H., Jing, F., and Tang, C., "*3 kW narrow-linewidth all-fiber amplifier with near diffraction limited beam quality*", Laser Phy **29**, 055103 (2019).
16. Wang, Y., Sun, Y., Peng, W., Feng, Y., Wang, J., Ma, Y., Gao, Q., Zhu, R., and Tang, C., "*3.25 kW all-fiberized and polarization-maintained Yb-doped amplifier with a 20 GHz linewidth and near-diffraction-limited beam quality*", Appl. Opt. **60**, 6331-6336 (2021).
17. Zeng, X., Cui, S., Cheng, X., and Feng, Y., "*Spectral compression by phase doubling in second harmonic generation*", Opt. Lett. **47**, 222-225 (2022).
18. Cui, S., Zeng, X., Jiang, H., Cheng, X., Yang, X., Zhou, J., and Feng,Y., "*Robust single-frequency 589 nm fiber laser based on phase modulation and passive demodulation*", Opt. Express. **30**, 9112-9118 (2022).
19. R. W. Boyd, Nonlinear Optics, (Rochester, New York, 2020).
20. Strickland, D., and Mourou, G., "*Compression of amplified chirped optical pulses*", Opt. Commun. **56**, 219-221 (1985).