CHINESE OPTICS LETTERS

Vol. 20, No. 8 | August 2022

Transfer of laser frequency from 729 nm to 1.5 μm with precision at the level of 10^{-20}

Pengcheng Fang (方鹏程)[1,2], Huanyao Sun (孙焕尧)[1], Yan Wang (王 艳)[1], Yanqi Xu (徐晏琪)[1], and Qunfeng Chen (陈群峰)[1*]

[1] State Key Laboratory of Magnetic Resonance and Atomic and Molecular Physics, Innovation Academy for Precision Measurement Science and Technology, Chinese Academy of Sciences, Wuhan 430071, China

[2] University of Chinese Academy of Sciences, Beijing 100049, China

*Corresponding author: qfchen@apm.ac.cn

Received January 30, 2022 | Accepted April 28, 2022 | Posted Online May 26, 2022

By using a self-reference transfer oscillator method, two individual 1560 nm lasers with about 1.2 GHz frequency difference were phase locked to a 729 nm ultra-stable laser at two preset ratios. By measuring the beat frequency of the two 1560 nm lasers, fractional instabilities of 2×10^{-17} at 1 s and 2×10^{-20} at 10,000 s averaging time were obtained, and the relative offset compared with the theoretical value was $4.2 \times 10^{-21} \pm 4.5 \times 10^{-20}$. The frequency ratio of them was evaluated to a level of 1.3×10^{-20} in one day's data acquisition. This work was a preparation for remote comparison of optical clocks through optical fiber links. The technique can also be used to synthesize ultra-stable lasers at other wavelengths.

Keywords: optical frequency transfer; optical clock comparison; optical frequency comb.

DOI: 10.3788/COL202220.081403

1. Introduction

Transferring of laser frequency from a reference laser to desired wavelengths is a very important technique in metrology and fundamental physics, e.g., for generating ultra-stable clock lasers to improve the stability of the optical clocks from low-thermal-noise Si resonators, which are not transparent at the wavelength of smaller than 1.2 μm[1–3], and for remote optical clock comparison[4–6]. In the remote optical clock comparison, the frequency information of the clock laser is sent to a remote site over a telecom fiber, which is demonstrated to be at the level of 10^{-19} or better[7–10] and is sufficient for the comparison of state-of-the-art optical clocks. In order to send the frequency information of optical clocks to remote sites over an optical fiber, the frequency of the clock laser has to be converted to communication wavelength, i.e., around 1.5 μm. Usually optical frequency combs (OFCs) are used to coherently bridge the phase between lasers with different wavelengths[11].

A direct method to transfer the frequency stability from a source laser to a target laser is realized by transferring the frequency stability of the source laser to the OFC teeth firstly by phase locking their beat signal to a radio frequency (RF) reference and then from the OFC teeth to the target laser by a similar scheme. This method requires that the frequency of the OFC be tuned with high bandwidth and limits the OFC only to be used to transfer frequency from one source laser. Telle *et al.* introduced a so-called transfer oscillator scheme[12] to bridge the lasers at different wavelengths without phase locking of the OFC to lasers. The scheme generated a 'virtual beat' signal between the source and the target laser, which could be stabilized to the RF reference to realize the frequency stability transfer[13]. This scheme reduced the requirement on the OFC. Because the external RF reference was involved in the scheme, in the remote comparison, the RF references in the two laboratories had to be referred to the International System of Units (SI) second, or the RF reference should also be sent from one lab to the other. In 2016, Yao *et al.* introduced an improved method by generating the RF reference from the source laser itself instead of using an external reference[14]. With Yao *et al.*'s method, the generated target laser frequency was free from external reference. In previous works, researchers demonstrated that by using an OFC it was possible to transfer laser frequency to other wavelengths with precision at the level of 10^{-21}[14,15].

In this work, we converted the frequency of a 729 nm ultra-stable laser for a Ca^+ clock to 1.5 μm by using a self-reference transfer oscillator method[12,16]. By mathematically deriving the relation between the lasers and the OFC, we constructed the RF processing system for the frequency conversion. Two individual 1560 nm lasers were phase locked to the 729 nm laser with two close preset ratios. The fractional instability of the frequency difference between the two target lasers was measured to be 1.6×10^{-17} at 1 s and 2×10^{-20} at 10,000 s averaging time, and the relative offset between the measured value and the theoretical

value was $4.2\times10^{-21}\pm4.5\times10^{-20}$. The ratio between the two lasers was measured to be a level of 1.3×10^{-20} in 1 day's data accumulation.

The frequency transferring system was built for the comparison of the optical clocks at the Innovation Academy for Precision Measurement Science and Technology, CAS[17–19] and the optical clock at the Huazhong University of Science and Technology[20]. The system could also be used to synthesize ultra-stable lasers for other purposes.

2. Derivation of the RF Processing Scheme

The RF processing scheme of the experiment is derived as follows. When two lasers with frequencies of ν_1 and ν_2 beat with an OFC, the beating frequencies f_{b1} and f_{b2} between the lasers and the OFC are

$$f_{b1}=\nu_1-m_1f_r-f_{CEO},\qquad f_{b2}=\nu_2-m_2f_r-f_{CEO},\tag{1}$$

where f_{CEO} is the carrier-envelope offset (CEO) frequency, f_r is the repetition rate of the OFC, and m_1 and m_2 are the corresponding mode numbers of the OFC teeth beating with the lasers. The frequencies f_{CEO} and f_r are normally stabilized to the RF reference to eliminate the long-term drift of the comb frequency. Therefore, the frequency ratio R between the two lasers can be written in the form of the OFC and the beat frequencies, i.e.,

$$R=\frac{\nu_2}{\nu_1}=\frac{m_2f_r+f_{CEO}+f_{b2}}{m_1f_r+f_{CEO}+f_{b1}}=\frac{m_2+x}{m_1},\tag{2}$$

where

$$x=\frac{m_1\nu_2-m_2\nu_1}{\nu_1}=\frac{m_1(f_{CEO}+f_{b2})-m_2(f_{CEO}+f_{b1})}{m_1f_r+f_{CEO}+f_{b1}}.\tag{3}$$

In Eqs. (2) and (3), m_1 and m_2 are measurable integers, and x is a decimal. The instability of x is m_1 times larger than R. Therefore, in frequency ratio measurement or frequency conversion, measuring or phase locking of the x instead of R directly will reduce the requirement on the processing system m_1 times. The numerator and denominator of Eq. (3) are at the level of 10^{14} Hz. They are reduced to a level of 10^6 to 10^7 Hz by multiplying with a small coefficient k and denoted as f_{diff} and f_{ref}, respectively, i.e.,

$$\begin{aligned}f_{diff}&=km_1(f_{CEO}+f_{b2})-km_2(f_{CEO}+f_{b1}),\\ f_{ref}&=km_1(f_r+f_{CEO}+f_{b1})-k(m_1-1)(f_{CEO}+f_{b1}).\end{aligned}\tag{4}$$

Here, the f_{ref} is treated following Yao's method[14]. From Eqs. (3) and (4), it can be derived that transfer of optical frequency from ν_1 to ν_2 with a preset value R_s (x_s) is equivalent to controlling ν_2 to let the equation

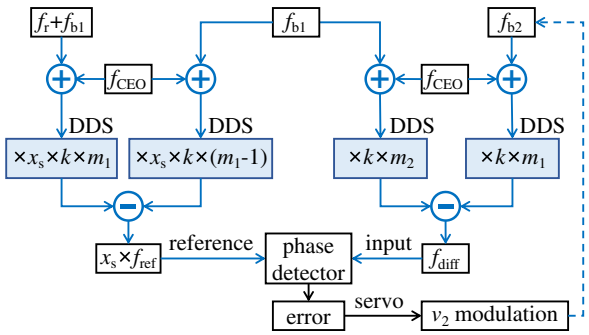

Fig. 1. RF signal processing scheme for the optical frequency transfer. ⊕ means adding the two input frequencies, and ⊖ means subtracting the two input frequencies. DDS denotes the scaling of the frequency with the corresponding factors in the box.

$$x_s=\frac{f_{diff}}{f_{ref}},\qquad \text{i.e., } x_s\cdot f_{ref}-f_{diff}=0,\tag{5}$$

hold. Equation (5) can be technically kept holding by feedback modulating the frequency of ν_2 to keep the RF signals f_{diff} being phase-locked onto $x_s\cdot f_{ref}$. Therefore, with the expression of Eqs. (4) and (5), the RF processing scheme for the frequency conversion can be constructed as Fig. 1. In the scheme, the addition and subtraction of the frequencies are realized by mixing the two input signals with frequency mixers and picking up the corresponding signal by using proper bandpass filters. The scaling of the frequency is realized by using direct digital synthesizers (DDSs). A DDS scales the input RF frequency with a factor of $n/2^N$, where n is the frequency tuning word (FTW) of the DDS, which is smaller than 2^N, and N is the bits of the FTW. For example, in our experiment, Analog Devices AD9956 is used to scale the frequency, whose N is 48. The coefficient k is set to $k=c/2^N$, and therefore, the FTW written to the DDS is $c\times m$ or $x_s\times c\times m$. The scheme in Fig. 1 is also used to measure x by generating an f_{ref} without multiplying x_s in the left part of the figure and replacing the phase detector with a frequency counter.

Compared with the previous work on the transfer of laser frequency, in this scheme, the frequency relation between the reference laser and the target laser is decomposed to basic RF processing actions, i.e., adding, subtracting, and scaling of RF frequencies. These functions can be realized by simple RF elements, e.g., mixers combined with filters are used to perform the adding and subtracting of frequency, and DDSs are used to scale the RF frequencies. There is no external reference or synthesizer involved in this scheme, and, therefore, the precision and stability of the generated laser's frequency do not rely on external reference or synthesizers.

3. Experimental Demonstration of the Scheme

To demonstrate the precision of the frequency transfer scheme, two 1560 nm lasers were phase locked to the same 729 nm

ultra-stable laser by using the scheme shown in Fig. 1. The optical setup for the experiment is illustrated in Fig. 2. As shown in the figure, a multi-branch Er-doped fiber-based OFC was used to bridge the three lasers. One branch was used to obtain the signal of f_{CEO} and f_r. The second branch was used to beat with the 729 nm laser (ν_1). Because the center wavelength of the OFC was at about 1.5 μm, the spectrum for the beating of 729 nm was generated by expanding the spectrum of the OFC to about 1460 nm and then frequency doubling to cover the wavelength of 729 nm. The third branch was used to beat with the two 1560 nm lasers. One of the 1560 nm lasers (ν_2) was frequency pre-locked to a 10 cm long optical resonator to keep the frequency from drifting away. The second 1560 nm laser (ν_2') was free running, and the frequency was controlled by monitoring the beat frequency with ν_2. The two 1560 nm lasers were combined by using a fiber optic coupler. One output of the coupler was sent to beat with the OFC. The second output was sent to a photo detector for measuring the beat frequency between the two lasers.

The repetition frequency of the OFC was about 200 MHz. The f_{CEO} and f_r of the OFC were phase locked to RF signals referred to as H-maser. An about 10 MHz RF signal (f_{ref1}) was generated from ν_1. This signal was used as the reference for the frequency counters for later measuring the beating frequency ($\Delta\nu = \nu_2 - \nu_2'$) between the two 1560 nm lasers. The f_{ref1} was generated according to Eq. (4), i.e., the left part of Fig. 1 without multiplying x_s. The numbers used to generate the RF signal were the comb mode number $m_1 = 2{,}055{,}168$ and $c = 6{,}847{,}836$.

ν_2 was phase locked to ν_1 by feeding back to the acousto-optic modulator (AOM1) with $x_s = 0.75$. The OFC mode number m_2 for ν_2 beating was 960,542. Therefore, $R_s = 960{,}542.75/2{,}055{,}168$. ν_2' was tuned about 1.2 GHz lower than ν_2 and phase locked to ν_1 by feeding back the fast signal to AOM2 and the slow signal to the laser's piezoelectric transducer (PZT) with $x_s' = 0.5$. The corresponding OFC mode number m_2' was 960,536. Therefore, $R_s' = 960{,}536.5/2{,}055{,}168$. From these numbers, the beating frequency ($\Delta\nu$) related to f_{ref1} and the ratio (R) between ν_2 and ν_2' were calculated to be

$$\Delta\nu = \frac{\nu_2 - \nu_2'}{f_{\mathrm{ref1}}} \times 10\,\mathrm{MHz} = \frac{(R_s - R_s')\nu_1}{k \times \nu_1} \times 10\,\mathrm{MHz}$$
$$= 1{,}250{,}026{,}239.036366754\,\mathrm{Hz},$$
$$R = \frac{\nu_2'}{\nu_2} = \frac{R_s'}{R_s} = 0.9999934932620125444703. \tag{6}$$

After the two lasers were phase locked, the $\Delta\nu$ was measured referred to f_{ref}. Because $\Delta\nu$ was at the level of gigahertz (GHz), which exceeded the measuring range of the frequency counter, the frequency of the signal was divided by 64 by using two cascading divide-by-eight static dividers HMC434. Symmetricom 3120A with a measuring bandwidth of 0.5 Hz was used as a high-precision counter to measure $\Delta\nu/64$. The recorded frequency (noted as f_m) is shown in Fig. 3(a). The figure shows the frequency difference between f_m and $\Delta\nu/64$. From the data, the average of f_m was calculated to be

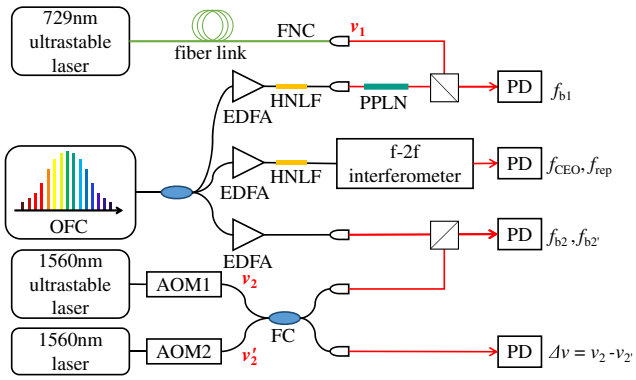

Fig. 2. Optical set-up for the frequency transfer. FNC, fiber noise cancellation technique was applied to this fiber link; PPLN, periodically poled lithium niobate, which was used to generate the second harmonic of the OFC; EDFA, erbium-doped optical fiber amplifier, which was used to amplify the power of the OFC; HNLF, highly nonlinear fiber, which was used to expand the spectrum of the comb; PD, photodetector; AOM, acousto-optic modulator, which was used to shift the optical frequency; FC, fiber optic coupler, which was used to combine the two 1560 nm lasers.

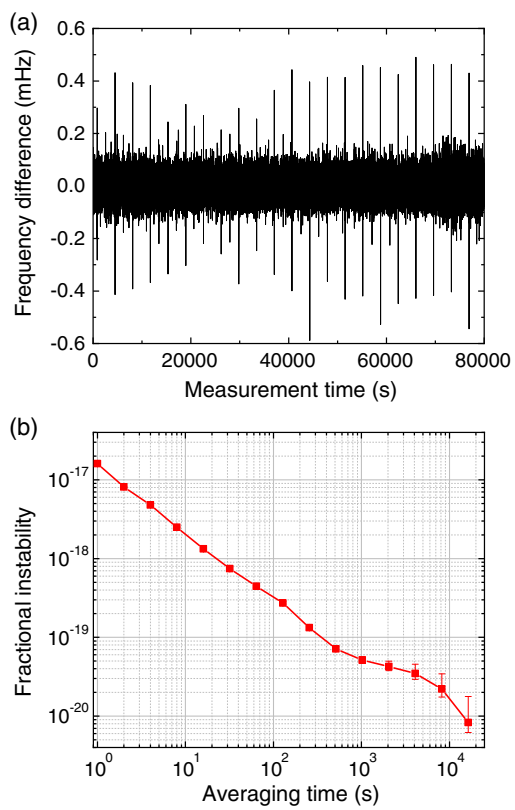

Fig. 3. Measured result of the beating frequency between two 1.5 μm transfer lasers. (a) is the frequency difference between f_m and $\Delta\nu/64$, and (b) is the corresponding fractional Allan deviation related to ν_2.

$$f_m = 19{,}531{,}659.984943243 \pm 1.4 \times 10^{-7}\ \text{Hz}. \quad (7)$$

From this data, the offset of the measured and theoretical beating frequency was calculated to be $0.8 \pm 9.0\,\mu$Hz, which was $6.6 \times 10^{-16} \pm 7.2 \times 10^{-15}$ related to the beating frequency and $4.2 \times 10^{-21} \pm 4.5 \times 10^{-20}$ related to ν_2. The fractional instability of the beat frequency is shown in Fig. 3(b). It shows that fractional Allan deviation was 1.6×10^{-17} and 2×10^{-20} at the averaging time of 1 s and 10,000 s, respectively.

The frequency ratio between ν_2' and ν_2 ($R = \nu_2'/\nu_2$) was also measured to double check the precision of the transfer scheme. R was measured according to Eqs. (2) and (3). The f_{ref} and f_{diff} for ν_2 and ν_2' (noted as f_{ref2} and f_{diff2}) were generated according to the left and right parts of the scheme shown in Fig. 1 with $x_s = 1$, respectively. The x for the two lasers was obtained by dividing the measured frequency f_{diff2} referred to f_{ref2} (noted as f_{dm}) with 10 MHz (noted as x_m). The recorded f_{dm} is shown in Fig. 4(a). From the figure, the statistic of f_{dm} was calculated to be $2{,}499{,}951.199465099 \pm 1.2 \times 10^{-7}$ Hz. Therefore, $x_m = -0.2499951199465099 \pm 1.2 \times 10^{-14}$, and the ratio was

$$R_m = 0.99999349326201254446 98 \pm 1.2 \times 10^{-20}, \quad (8)$$

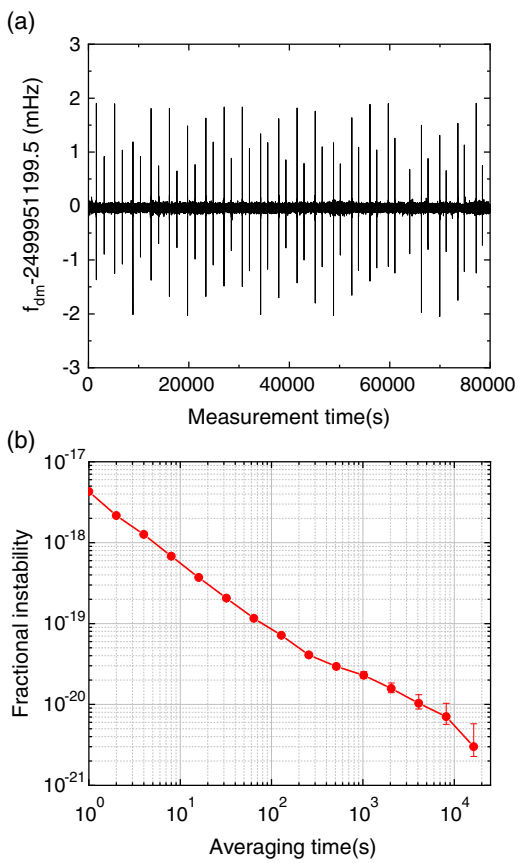

Fig. 4. Frequency ratio of the two transfer lasers measured over the same OFC: (a) the measured value of f_{diff2} (f_{dm}), (b) the corresponding Allan deviation of R_m.

which was $-5 \times 10^{-22} \pm 1.3 \times 10^{-20}$ offset from the setting R in Eq. (6). The fractional Allan deviation is shown in Fig. 4(b), which shows that the instability of R_m was 4.2×10^{-18} at 1 s and 4.5×10^{-21} at 10,000 s averaging time.

Because there was only one OFC available in our laboratory, the measurement of the ratio between the two 1.5 μm lasers was carried out by using the same beating signal as the comb. This result on the ratio R demonstrated only the precision and consistency of the RF processing and frequency locking electronics.

In the transfer experiment, two different branches of the OFC were used to beat with the source laser (ν_1) and the target lasers (ν_2 and ν_2'). The inter-branch frequency noise introduced by the non-common mode fiber of the OFC might reduce the transfer accuracy and stability. The frequency transfer was expected to be optimized by using a single branch of the OFC or introducing the inter-branch noise cancellation scheme[21].

4. Conclusion

We transferred the frequency of a Ca^+ clock laser at 729 nm to 1.5 μm in the telecommunication band at an accurate frequency ratio for remote clock comparison. To demonstrate the precision of the frequency transferring process, two 1560 nm lasers were phase locked to the 729 nm laser with slightly different frequency ratios. The relative uncertainty of the frequency difference and frequency ratio between the two transfer lasers were measured to be 4.5×10^{-20} and 1.3×10^{-20} in one day's data acquisition, respectively. This result suggests that the transfer stability and accuracy of our setup are enough for remote frequency comparison of optical clocks at the level of 10^{-18}.

Acknowledgement

We acknowledge the researchers from National Time Service Center, CAS for technical support on the erbium-fiber-based frequency comb. This work was supported by the National Key R&D Program of China (Nos. 2017YFA0304403 and 2020YFA0309801), the Strategic Priority Research Program of the Chinese Academy of Sciences (Nos. XDB21010300 and XDB21030100), and the National Natural Science Foundation of China (Nos. 91636110 and U1738141).

References

1. D. G. Matei, T. Legero, S. Häfner, C. Grebing, R. Weyrich, W. Zhang, L. Sonderhouse, J. M. Robinson, J. Ye, F. Riehle, and U. Sterr, "1.5 μm lasers with sub-10 mHz linewidth," Phys. Rev. Lett. **118**, 263202 (2017).
2. E. Oelker, R. Hutson, C. Kennedy, L. Sonderhouse, T. Bothwell, A. Goban, D. Kedar, C. Sanner, J. Robinson, G. Marti, D. G. Matei, T. Legero, M. Giunta, R. Holzwarth, F. Riehle, U. Sterr, and J. Ye, "Demonstration of 4.8×10^{-17} stability at 1 s for two independent optical clocks," Nat. Photonics **13**, 714 (2019).
3. J. M. Robinson, E. Oelker, W. R. Milner, W. Zhang, T. Legero, D. G. Matei, F. Riehle, U. Sterr, and J. Ye, "Crystalline optical cavity at 4 K with thermal-noise-limited instability and ultralow drift," Optica **6**, 240 (2019).
4. C. Lisdat, G. Grosche, N. Quintin, C. Shi, S. M. F. Raupach, C. Grebing, D. Nicolodi, F. Stefani, A. Al-Masoudi, S. Dörscher, S. Häfner,

J.-L. Robyr, N. Chiodo, S. Bilicki, E. Bookjans, A. Koczwara, S. Koke, A. Kuhl, F. Wiotte, F. Meynadier, E. Camisard, M. Abgrall, M. Lours, T. Legero, H. Schnatz, U. Sterr, H. Denker, C. Chardonnet, Y. Le Coq, G. Santarelli, A. Amy-Klein, R. Le Targat, J. Lodewyck, O. Lopez, and P.-E. Pottie, "A clock network for geodesy and fundamental science," Nat. Commun. **7**, 12443 (2016).

5. J. Grotti, S. Koller, S. Vogt, S. Hafner, U. Sterr, C. Lisdat, H. Denker, C. Voigt, L. Timmen, A. Rolland, F. N. Baynes, H. S. Margolis, M. Zampaolo, P. Thoumany, M. Pizzocaro, B. Rauf, F. Bregolin, A. Tampellini, P. Barbieri, M. Zucco, G. A. Costanzo, C. Clivati, F. Levi, and D. Calonico, "Geodesy and metrology with a transportable optical clock," Nat. Phys. **14**, 437 (2018).
6. Boulder Atomic Clock Optical Network (BACON) Collaboration, "Frequency ratio measurements at 18-digit accuracy using an optical clock network," Nature **591**, 564 (2021).
7. L.-S. Ma, P. Jungner, J. Ye, and J. L. Hall, "Delivering the same optical frequency at two places: accurate cancellation of phase noise introduced by an optical fiber or other time-varying path," Opt. Lett. **19**, 1777 (1994).
8. K. Predehl, G. Grosche, S. M. F. Raupach, S. Droste, O. Terra, J. Alnis, T. Legero, T. W. Hänsch, T. Udem, R. Holzwarth, and H. Schnatz, "A 920-kilometer optical fiber link for frequency metrology at the 19th decimal place," Science **336**, 441 (2012).
9. S. Droste, F. Ozimek, T. Udem, K. Predehl, T. W. Hänsch, H. Schnatz, G. Grosche, and R. Holzwarth, "Optical-frequency transfer over a single-span 1840 km fiber link," Phys. Rev. Lett. **111**, 110801 (2013).
10. S. M. Raupach, A. Koczwara, and G. Grosche, "Brillouin amplification supports 1×10^{-20} uncertainty in optical frequency transfer over 1400 km of underground fiber," Phys. Rev. A **92**, 021801 (2015).
11. L.-S. Ma, Z. Bi, A. Bartels, L. Robertsson, M. Zucco, R. S. Windeler, G. Wilpers, C. Oates, L. Hollberg, and S. A. Diddams, "Optical frequency synthesis and comparison with uncertainty at the 10^{-19} level," Science **303**, 1843 (2004).
12. H. R. Telle, B. Lipphardt, and J. Stenger, "Kerr-lens, mode-locked lasers as transfer oscillators for optical frequency measurements," Appl. Phys. B **74**, 1 (2002).
13. D. Nicolodi, B. Argence, W. Zhang, R. Le Targat, G. Santarelli, and Y. Le Coq, "Spectral purity transfer between optical wavelengths at the 10^{-18} level," Nat. Photonics **8**, 219 (2014).
14. Y. Yao, Y. Jiang, H. Yu, Z. Bi, and L. Ma, "Optical frequency divider with division uncertainty at the 10^{-21} level," Nat. Sci. Rev. **3**, 463 (2016).
15. E. Benkler, B. Lipphardt, T. Puppe, R. Wilk, F. Rohde, and U. Sterr, "End-to-end topology for fiber comb based optical frequency transfer at the 10^{-21} level," Opt. Express **27**, 36886 (2019).
16. J. Stenger, H. Schnatz, C. Tamm, and H. R. Telle, "Ultraprecise measurement of optical frequency ratios," Phys. Rev. Lett. **88**, 073601 (2002).
17. K. Cui, S. Chao, C. Sun, S. Wang, P. Zhang, Y. Wei, J. Cao, H. Shu, and X. Huang, "Evaluation of the performance of a $^{40}Ca^{+} - {}^{27}Al^{+}$ optical clock," arXiv:2012.05496 (2020).
18. B. Zhang, Y. Huang, Y. Hao, H. Zhang, M. Zeng, H. Guan, and K. Gao, "Improvement in the stability of a $^{40}Ca^{+}$ ion optical clock using the Ramsey method," J. Appl. Phys. **128**, 143105 (2020).
19. Y. Huang, B. Zhang, M. Zeng, Y. Hao, H. Zhang, H. Guan, Z. Chen, M. Wang, and K. Gao, "A liquid nitrogen-cooled Ca^{+} optical clock with systematic uncertainty of 3×10^{-18}," arXiv:2103.08913 (2021).
20. J. Zhang, K. Deng, J. Luo, and Z. Lu, "Direct laser cooling Al^{+} ion optical clocks," Chin. Phys. Lett. **34**, 050601 (2017).
21. K. Kashiwagi, Y. Nakajima, M. Wada, S. Okubo, and H. Inaba, "Multi-branch fiber comb with relative frequency uncertainty at 10^{-20} using fiber noise difference cancellation," Opt. Express **26**, 8831 (2018).