CHINESE OPTICS LETTERS

Vol. 19, No. 4 | April 2021

Dimming control scheme based on hybrid LACO-SCFDM for visible light communications

Siqiao Li (李思桥)[1], Tiantian Zhang (张甜甜)[2], Yaojun Qiao (乔耀军)[1*], and Ji Zhou (周 骥)[3]

[1] Beijing Key Laboratory of Space-Ground Interconnection and Convergence, School of Information and Communication Engineering, Beijing University of Posts and Telecommunications, Beijing 100876, China

[2] Institute of Electronic and Information Industry, China Center for Information Industry Development, Beijing 100876, China

[3] Department of Electronic Engineering, College of Information Science and Technology, Jinan University, Guangzhou 510632, China

*Corresponding author: qiao@bupt.edu.cn

Received September 10, 2020 | Accepted October 19, 2020 | Posted Online February 2, 2021

This paper proposes a hybrid layered asymmetrically clipped optical (HLACO) single-carrier frequency-division multiplexing (SCFDM) scheme for dimmable visible light communication. It designs a signal structure that combines layered asymmetrically clipped optical (LACO)-SCFDM and negative LACO-SCFDM in proportion for improving the inherent weaknesses of orthogonal frequency-division multiplexing (OFDM)-based dimmable schemes and further enhancing the system performance. Compared to the HLACO-OFDM-based dimming scheme, it obtains a lower bit error ratio and enables efficient communication over broader dimming range. Its spectral efficiency realizes 2.875 bit·s^{-1}·Hz^{-1} within the dimming range of 30%–70%, and the attainable average spectral efficiency gains exceed at least 19.21% compared to other traditional dimmable schemes.

Keywords: dimming control; single-carrier frequency-division multiplexing; visible light communication; spectral efficiency; complexity.

DOI: 10.3788/COL202119.040601

1. Introduction

Visible light communication (VLC) driven by light emitting diodes (LEDs) has numerous superiorities including high confidentiality, no electromagnetic radiation, low cost, and unregulated spectrum resource, which shows acknowledged potentials for radio frequency wireless communication[1–5]. VLC can realize illumination and communication concurrently, and the lighting intensity can be adjusted according to application scenarios.

For efficient data transmission, optical orthogonal frequency division multiplexing (O-OFDM) and its variants have been increasingly recognized in dimmable VLC in virtue of the superiorities of high spectral utilization and resistance to frequency selective fading[6,7]. However, the orthogonal frequency-division multiplexing (OFDM) signal has an inherently high peak-to-average power ratio (PAPR) characteristic, which undoubtedly increases the equipment cost of the system. As a result of the restricted modulation bandwidth of LEDs, the OFDM signal suffers from severe high-frequency power attenuation, which limits the implementation of high-speed VLC. Therefore, it is meaningful to achieve effective OFDM modulation equalization in VLC systems with severely limited device linearity and bandwidth[7]. Recently, single-carrier frequency-division multiplexing (SCFDM) is generated by adding a pretreatment technology called discrete Hartley transform (DHT)-spread before DHT multiplexing at the OFDM transmitter, so it is also called DHT-spread OFDM. The DHT-spread technique introduces a certain correlation between subcarriers, changing the high PAPR distribution of OFDM. It neither introduces signal distortion nor reduces the spectral efficiency[8]. Since the VLC system based on intensity modulation/direct detection (IM/DD) requires the transmitted signals to be non-negative and real-valued[9,10], direct-current offset O-OFDM (DCO-OFDM) and asymmetrically clipped O-OFDM (ACO-OFDM) are proposed to satisfy this restriction. Recently, various dimmable VLC schemes have been achieved. In Ref. [11], OFDM is combined with pulse width modulation (PWM) signals, and different illumination levels are realized by altering the duty cycle of PWM. It is implemented easily but wastes part of the transmission efficiency due to the idle "off" state. For utilizing both "on" and "off" states of PWM, the reverse polarity O-OFDM dimmable VLC scheme is accomplished[12]. The data rate is not restricted by the PWM frequency, but it only uses odd subcarriers to carry data, which is against the spectral efficiency. The asymmetric hybrid O-OFDM (AHO-OFDM) dimmable scheme

is developed by superposing two different signals with opposite polarities for better adaptability to the limited quasi-linear range of LEDs[13]. The layered ACO-OFDM (LACO-OFDM) dimmable scheme further enhances the spectral efficiency, but it also increases computational complexity owing to the multi-layer OFDM-based encoding structure[14]. In Ref. [15], a negative hybrid ACO-OFDM (HACO-OFDM) is designed to combine with HACO-OFDM in proportion. In addition, the hybrid LACO-OFDM (HLACO-OFDM) scheme with superimposing multi-layer signals can fully utilize subcarriers for improving the transmission efficiency[16]. Unfortunately, limited by the inherent characteristic of the OFDM symbol, the performance of the HLACO-OFDM scheme is seriously deteriorated. Recently, Zhou *et al.* proposed a layered/enhanced ACO-SCFDM (L/E-ACO-SCFDM) scheme[17] for optical wireless communications, which enables the reduction of PAPR and resists high-frequency distortion. Moreover, its simplified multiplexing structure can effectively decrease computational complexity. Based on numerous advantages, it is expected to be a potential performance-optimization technology for dimmable VLC.

In this paper, we further design a signal structure that combines LACO-SCFDM and negative LACO-SCFDM in proportion and propose an HLACO-SCFDM scheme for dimmable VLC. Different dimming levels are realized by altering the mixing proportion between the two signals. Compared to HLACO-OFDM, the proposed method inherits the advantages of low PAPR and resistance to high-frequency distortion of SCFDM-based encoding structure, obtains better bit error ratio (BER) performance, and actualizes efficient communication over a wider dimming range. Simulation results demonstrate that a highly stable spectral efficiency of 2.875 bit·s^{-1}·Hz^{-1} for this method is able to be realized within the dimming range of 30% to 70%. The maximum achievable average spectral efficiencies of HLACO-SCFDM with one- to four-layer structures are calculated to be approximately 1.45, 2.01, 2.27, and 2.37 bit·s^{-1}·Hz^{-1}, which is greater than HLACO-OFDM with 1.39, 1.97, 2.06, and 2.13 bit·s^{-1}·Hz^{-1}. Compared with the conventional HLACO-OFDM[16], hybrid HACO-OFDM[15], DCO-OFDM[17], and AHO-SCFDM[18] dimming schemes, the attainable average spectral efficiency gains of the proposed scheme are 11.03%, 19.21%, 23.29%, and 24.14%. Besides, the proposed method has low computational complexity, and its dimming control process is relatively simple.

2. Principle of the Proposed HLACO-SCFDM Dimming Method

The structure of the proposed HLACO-SCFDM dimming method is demonstrated in Fig. 1. L layers unclipped bipolar SCFDM signals are first generated in the encoding part and then sent to the dimming control unit. For generating lth-layer ACO-SCFDM signal $y^{(l)}_{\mathrm{ACO},i}$, the negative part of the unclipped bipolar SCFDM signal $y^{(l)}_i$ is clipped, which is denoted as

$$y^{(l)}_{\mathrm{ACO},i} = \lfloor y^{(l)}_i \rfloor_c = \begin{cases} y^{(l)}_i, & y^{(l)}_i \geq 0 \\ 0, & y^{(l)}_i < 0 \end{cases}. \tag{1}$$

Then, LACO-SCFDM is generated by superimposing multi-layer ACO-SCFDM signals. Similarly, unipolar $y^{(l)}_{\mathrm{Negative\,ACO},i}$ is generated by clipping the positive part, while the negative counterpart remains. Negative LACO-SCFDM is obtained by superimposing multi-layer negative ACO-SCFDM signals. The dynamic range of the LED is expressed as $[I_{\mathrm{L}}, I_{\mathrm{H}}]$, in which the transmission performance is considered linear[19]. For better adaptation to the restricted linear range of LEDs, the unipolar LACO-SCFDM and negative LACO-SCFDM signals need to be superimposed on the DC biases I_{L} and I_{H}, respectively. Then, they are mixed together with the dimming ratio α, and the average intensity[16] of the combined signal I_{D} is calculated by

$$I_{\mathrm{D}} = (1-\alpha) \cdot (I_{\mathrm{L}} + z'_{\mathrm{LACO}}) + \alpha \cdot (I_{\mathrm{H}} + z'_{\mathrm{Negative\,LACO}}), \tag{2}$$

where time-domain LACO-SCFDM and negative LACO-SCFDM are represented as

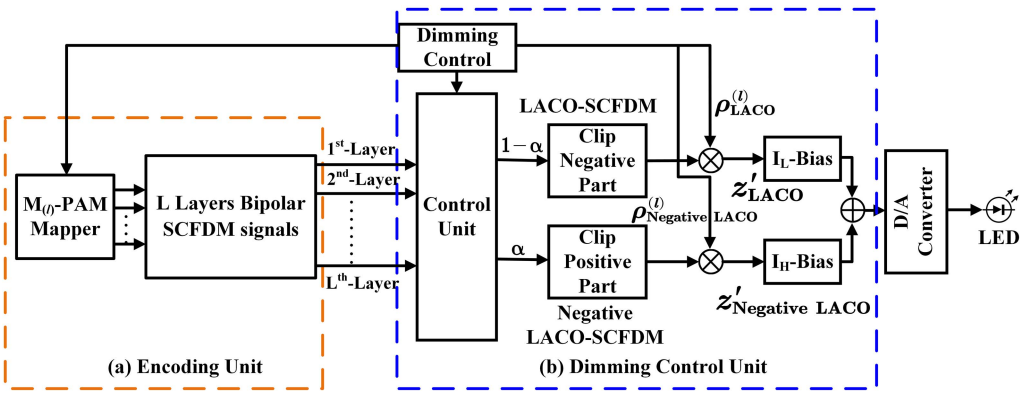

Fig. 1. Schematic of the proposed HLACO-SCFDM dimming method.

$$z'_{\mathrm{LACO}} = \sum_{l=1}^{L} \frac{y_{\mathrm{ACO}}^{(l)}}{\sigma_{\mathrm{RMS,ACO}}^{(l)}} \cdot \frac{I_{\mathrm{H}} - I_{\mathrm{L}}}{\rho_{\mathrm{LACO}}^{(l)}},$$
$$z'_{\mathrm{Negative\,LACO}} = \sum_{l=1}^{L} \frac{y_{\mathrm{Negative\,ACO}}^{(l)}}{\sigma_{\mathrm{RMS,Negative\,ACO}}^{(l)}} \cdot \frac{I_{\mathrm{H}} - I_{\mathrm{L}}}{\rho_{\mathrm{Negative\,LACO}}^{(l)}}, \quad (3)$$

where $\sigma_{\mathrm{RMS,ACO}}^{(l)}$ and $\sigma_{\mathrm{RMS,Negative\,ACO}}^{(l)}$ are the root mean square of $y_{\mathrm{ACO}}^{(l)}$ and $y_{\mathrm{Negative\,ACO}}^{(l)}$, respectively. The amplitude scaling factors $\rho_{\mathrm{LACO}}^{(l)}$ and $\rho_{\mathrm{Negative\,LACO}}^{(l)}$ are defined to adjust the signal amplitude. When the mixed transmitted signals exceed the limited linear range of LEDs, it will cause further clipping operation, which brings about signal distortion. Small scaling factors will produce high clipping probability, but large scaling factors also lead to low-power efficiency. Therefore, there must be a trade-off between power efficiency and clipping probability. Dimming level η[15] is expressed as

$$\eta = \frac{I_{\mathrm{D}} - I_{\mathrm{L}}}{I_{\mathrm{H}} - I_{\mathrm{L}}} = \alpha + \frac{1}{I_{\mathrm{H}} - I_{\mathrm{L}}}\left[(1-\alpha) \cdot \left(\sum_{l=1}^{L} \frac{y_{\mathrm{ACO}}^{(l)}}{\sigma_{\mathrm{RMS,ACO}}^{(l)}} \cdot \frac{I_{\mathrm{H}} - I_{\mathrm{L}}}{\rho_{\mathrm{LACO}}^{(l)}}\right) + \alpha \cdot \left(\sum_{l=1}^{L} \frac{y_{\mathrm{Negative\,ACO}}^{(l)}}{\sigma_{\mathrm{RMS,Negative\,ACO}}^{(l)}} \cdot \frac{I_{\mathrm{H}} - I_{\mathrm{L}}}{\rho_{\mathrm{Negative\,LACO}}^{(l)}}\right)\right]. \quad (4)$$

Assuming that the LACO-SCFDM and negative LACO-SCFDM signals have a zero mean, the average intensity of the combined signal I_{D} equivalent with the average optical power of the LED and the dimming level η is equal to α. If not, the dimming control is realized by jointly altering the mixing proportion and the scaling factors. If the ratio α is zero, only LACO-SCFDM exists in the hybrid signal, which can be used to achieve a low illumination level due to its lower average value. We call this low illumination level η_{L}. Similarly, altering the ratio to one, negative LACO-SCFDM is applied to accomplish high illumination levels owing to its higher average value. We call this high illumination level η_{H}. So, by adjusting the ratio α between 0 and 1, any illumination level from η_{L} to η_{H} can be achieved. For achieving the illumination level below η_{L} or above η_{H}, the signal power should be further reduced by further adjusting the scaling factors, which undoubtedly introduces signal distortion and increases the BER of the dimmable system. Therefore, under extreme dimming requirements, the system cannot support high modulation levels by only reducing the modulation level to satisfy the BER threshold.

Furthermore, communication quality should be guaranteed under certain illumination requirements. DHT is usually used in SCFDM multiplexing. Due to its real-value transformation process, the pulse amplitude modulation (PAM) symbol is still real-valued after DHT multiplexing, which satisfies the requirements of IM/DD. Therefore, it can be easily implemented without Hermitian symmetry. But, for discrete Fourier transform-based multiplexing OFDM, the quadrature amplitude modulation (QAM) signal should first make the Hermitian symmetric operation in order to achieve real-valued output. The spectral efficiencies of HLACO-SCFDM and traditional HLACO-OFDM are calculated by[14]

$$\xi_{\mathrm{SEsc}} = \sum_{l=1}^{L} \frac{\log_2 M_{\mathrm{sc},l}}{2^l}, \qquad \xi_{\mathrm{SEo}} = \sum_{l=1}^{L} \frac{\log_2 M_{\mathrm{o},l}}{2^{l+1}}, \quad (5)$$

where $M_{\mathrm{sc},l}$ and $M_{\mathrm{o},l}$ are the lth-layer PAM and QAM modulation orders. When $M_{\mathrm{o},l} = M_{\mathrm{sc},l}^2$, the spectral efficiency of the proposed method with $M_{\mathrm{sc},l}$-PAM modulation is identical to $M_{\mathrm{o},l}$-QAM modulated HLACO-OFDM in IM/DD[19]. Besides, Refs. [20,21] have proved that they have the same BER performance in the additive white Gaussian noise channel and the actual optical fiber transmission link.

At the receiver, the error propagation effect in different layers is considered and removed by the iteration received algorithm. As we all know, signals are superimposed on DC biases for driving LEDs, which will affect the amplitude of the zeroth subcarrier of the frequency-domain signal. The value on the zeroth subcarrier is detected to distinguish whether the signal is LACO-SCFDM or negative LACO-SCFDM so that the clipping noise can be successfully reproduced to decode multi-layer signals[16].

3. Simulation Results and Discussion

Numerical simulations are conducted to evaluate HLACO-SCFDM and HLACO-OFDM in the following. The main simulation parameters are listed in Table 1. Sixteen cyclic prefixes and ten training sequences are used to eliminate inter-symbol interference and estimate channel, respectively. A low-pass filter with 10 MHz bandwidth is modeled to simulate the low-pass response of the VLC channel, which is a reasonable approximation of the experimental results in Ref. [2]. The target BER is set to 2×10^{-3}. In addition, for better comparison of the performance of the two schemes near the forward error correction (FEC) threshold, we assume that the noise power is −22.8 dBm, which corresponds to the noise figure of 0.0023. Comparisons involved in the following are all achieved under the same spectral efficiency. According to the Eq. (5), 4-PAM modulated HLACO-SCFDM and 16-QAM modulated HLACO-OFDM

Table 1. Simulation Parameters.

Parameters	Values	Parameters	Values
Number of subcarriers	256	Signal bandwidth	100 MHz
Cyclic prefix	16	Low-pass filter bandwidth	10 MHz
Number of symbols	512	Noise power	−22.8 dBm
Training sequences	10	Target BER	2×10^{-3}

correspond to 1.875 bit·s^{-1}·Hz^{-1}, and 8-PAM and 64-QAM modulation levels correspond to 2.8125 bit·s^{-1}·Hz^{-1}.

3.1. Analysis of BER performance

In Fig. 2(a), the same scaling factors are selected to evaluate the transmission characteristics of the proposed HLACO-SCFDM and HLACO-OFDM under a certain BER threshold. For any scaling factors, 64-QAM modulated HLACO-OFDM never satisfies the requirement of the FEC limit, while the proposed method with 8-PAM modulation enables a stable communication with the spectral efficiency of 2.8125 bit·s^{-1}·Hz^{-1}. Besides, the proposed method is capable of reaching the target BER over a broad range. Inserts show the decoding constellations of the first-layer HLACO-OFDM and HLACO-SCFDM signals, respectively. The colorbar ranges from blue, cyan, and yellow to red. The closer the color of the decoded data points on the constellations is to red, the more the decoded data points gather, which means that the BER is low. That is to say, the decoded signals for 8-PAM modulated HLACO-SCFDM are concentrated in the red area, indicating that the BER performance is better. This is a result of introducing the SCFDM-based encoding method to dimmable VLC. On the one hand, in contrast to the OFDM signal with Gaussian-distributed characteristics, the DHT-spread operation introduces a certain correlation between subcarriers, and the amplitude of the SCFDM signal is with triangular distribution[8]. Thus, the SCFDM-based signal has lower PAPR under the condition of power normalization, which effectively alleviates nonlinear distortion caused by amplitude clipping of LEDs, suppresses spectrum broadening, and further heightens system performance. On the other hand, due to the restricted linear range of LEDs, the OFDM signal suffers high-frequency distortion under the influence of channel multi-path fading. But, for SCFDM signal, signal distortion at the high-frequency subcarrier positions is averaged to all subcarriers by the DHT-spread technique. Figure 2(b) depicts the signal-to-noise ratio (SNR) at data subcarriers of points A and B of Fig. 2(a) under the same spectral efficiency and scaling factors, respectively. The SNRs at all data subcarriers of HLACO-SCFDM are greater than the required SNR, while HLACO-OFDM signals at high-frequency subcarriers cannot guarantee the required SNR.

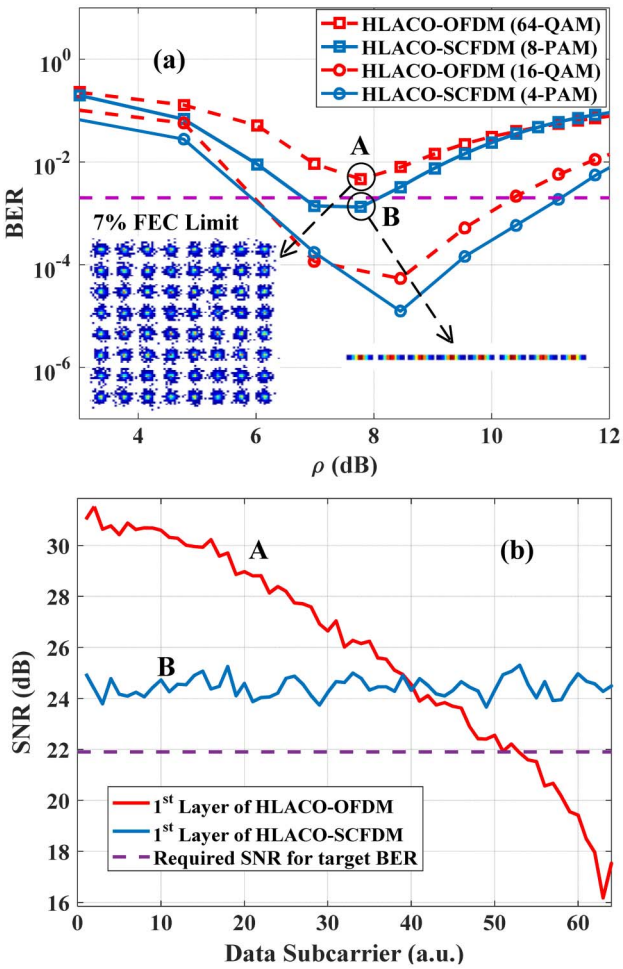

Fig. 2. (a) BER characteristics of HLACO-SCFDM and HLACO-OFDM versus the scaling factor ρ with different spectral efficiencies. Inserts show the first-layer signal decoding constellations, respectively. (b) SNR on different subcarriers for points A and B.

3.2. Performance evaluation for communication and illumination

Multi-layer signals are superimposed to transmit simultaneously for fully utilizing the subcarriers. However, along with the layer number of the superimposed signals increasing, the growth rate of spectral efficiency gradually decreases. Therefore, further increasing the number of layers may have little contribution to spectral efficiency. Besides, the computational complexity should be well-considered in multi-layer transmission systems. For eliminating the layer interference, the iteration received algorithm is used to decode multi-layer signals layer by layer, which brings about high computational complexity. Therefore, under different illumination requirements, we must balance the achievable spectral efficiency and complexity. Besides, increasing the number of layers will expand the signal amplitude, which will aggravate the clipping and deteriorate the BER performance of system. Figures 3(a) and 3(b) reveal the spectral efficiencies for different layers of HLACO-OFDM and the proposed method, respectively. The maximum calculated average spectral efficiencies of HLACO-SCFDM with one- to four-layer structures within the dimming level of 5% and 95% reach approximately 1.45, 2.01, 2.27, and 2.37 bit·s^{-1}·Hz^{-1}, which is greater than HLACO-OFDM with 1.39, 1.97, 2.06, and 2.13 bit·s^{-1}·Hz^{-1}. It indicates that the communication performance of the proposed method excelled HLACO-OFDM under the same BER threshold.

Figure 4 depicts the attainable spectral efficiency of the proposed method, HLACO-OFDM[16], hybrid HACO-OFDM[15], AHO-SCFDM[18], and DCO-OFDM[17] under different dimming requirements. DCO-OFDM performs better due to the utilization of the entire spectral resource, while the effect of LEDs

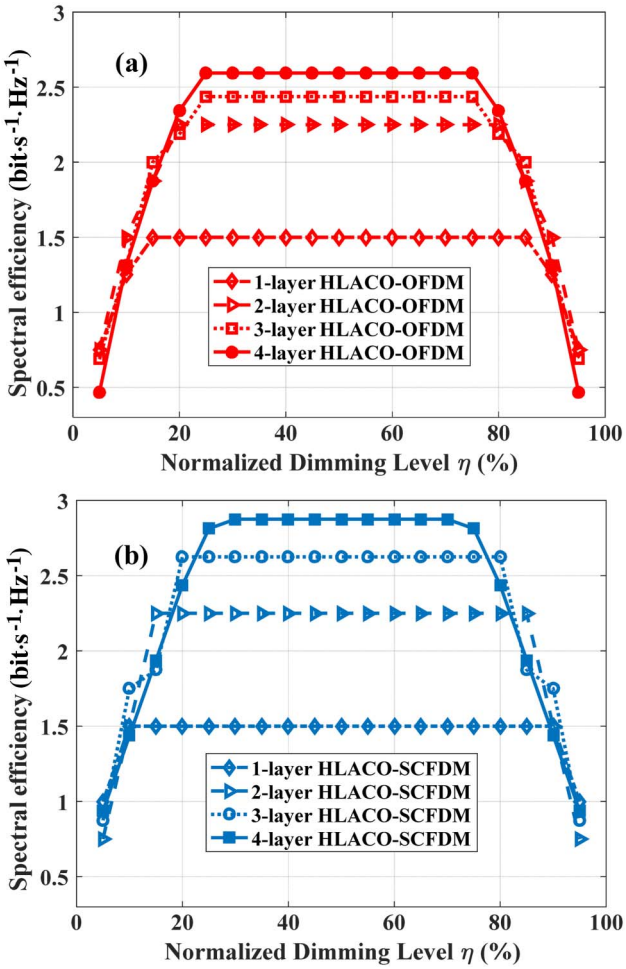

Fig. 3. Analysis of spectral efficiency versus η for different layers of (a) HLACO-OFDM and (b) HLACO-SCFDM.

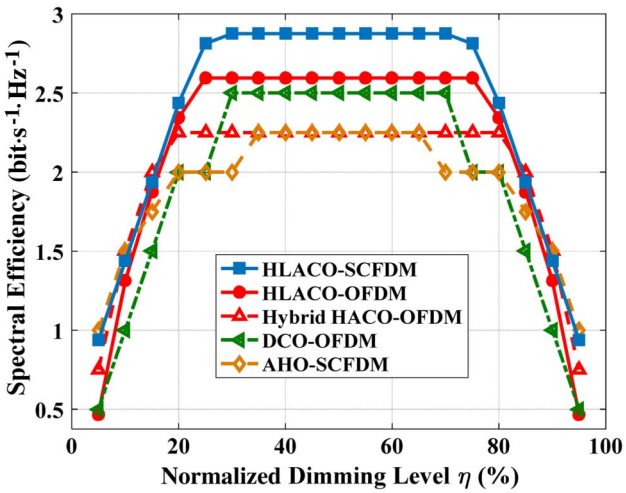

Fig. 4. Analysis of spectral efficiency versus η for HLACO-SCFDM, HLACO-OFDM, hybrid HACO-OFDM, DCO-OFDM, and AHO-SCFDM.

Table 2. Computational Complexity.

Dimmable Scheme	Transmitter	Receiver
HLACO-SCFDM	$\frac{(2\cdot 2^L-2)}{2^L}\mathcal{O}(N)$	$\frac{(4\cdot 2^L-5)}{2^L}\mathcal{O}(N\log_2 N)$
HLACO-OFDM[16]	$\frac{(2\cdot 2^L-2)}{2^L}\mathcal{O}(N\log_2 N)$	$\frac{(5\cdot 2^L-8)}{2^L}\mathcal{O}(N\log_2 N)$
AHO-SCFDM[18]	$\frac{3}{2}\mathcal{O}(N)$	$\frac{11}{4}\mathcal{O}(N\log_2 N)$
DCO-OFDM[17]	$\mathcal{O}(N\log_2 N)$	$\mathcal{O}(N\log_2 N)$

nonlinearity inevitably plays dominant roles for bipolar DCO-OFDM at the lower and the higher dimming levels. Hybrid HACO-OFDM and HLACO-OFDM fully utilize the linear range of LEDs, but the performance of the dimming system will be remarkably affected by the influence of inherent defect of OFDM signals. For the proposed method, the maximum spectral efficiency within the dimming range of 30% to 70% can attain 2.875 bit·s^{-1}·Hz^{-1}, which shows more prominent advantages. Average spectral efficiency gains[22] are defined as

$$\Delta\bar{\xi}_{\mathrm{SE}} = \sum_{n=1}^{N}(\xi_{\mathrm{sc},n}^{\mathrm{SE}} - \xi_{\mathrm{oth},n}^{\mathrm{SE}}) \Big/ \sum_{n=1}^{N}\xi_{\mathrm{oth},n}^{\mathrm{SE}}, \tag{6}$$

where $\xi_{\mathrm{sc},n}^{\mathrm{SE}}$ and $\xi_{\mathrm{oth},n}^{\mathrm{SE}}$ are the spectral efficiency supported by the nth illumination requirement for the proposed method and other comparison schemes, respectively. In comparison with HLACO-OFDM, hybrid HACO-OFDM, DCO-OFDM, and AHO-SCFDM, the achievable average spectral efficiency gains are 11.03%, 19.21%, 23.29%, and 24.14%.

3.3. Complexity

Table 2 shows the computational complexity of the proposed and other dimmable VLC schemes. DCO-OFDM has the minimum computational complexity and implementation complexity with only one N-point fast Fourier transform (FFT) at the transmitter and one N-point inverse FFT at the receiver, which can be expressed as $\mathcal{O}(N\log_2 N)$[23]. Compared to HLACO-OFDM with the computational complexity of $\sum_{l=1}^{L}\mathcal{O}[(N/2^{l-1})\log_2(N/2^{l-1})]$, the proposed SCFDM-based scheme with simplified encoding achieves low computational complexity of $\sum_{l=1}^{L}\mathcal{O}(N/2^{l-1})$ [17]. Moreover, its dimming control processes are relatively simple.

4. Conclusion

In conclusion, this paper proposed an HLACO-SCFDM scheme with high spectral efficiency over a broad dimming range and low complexity for dimmable VLC. For the four-layer encoding structure, the proposed method with better BER performance realizes a stable spectral efficiency of 2.875 bit·s^{-1}·Hz^{-1} over

the dimming level between 30% and 70%, which performs better than HLACO-OFDM. Besides, the average spectral efficiencies of the proposed method exceed HLACO-OFDM under the same BER threshold. The attainable average spectral efficiency gains of the proposed method are 11.03%, 19.21%, 23.29%, and 24.14% compared to HLACO-OFDM, hybrid HACO-OFDM, DCO-OFDM, and AHO-SCFDM. Moreover, the computational complexity of the encoding structure and implementation complexity of dimming processes are relatively low. Consequently, the proposed HLACO-SCFDM scheme performs better in terms of communication, illumination, and system complexity.

Acknowledgement

This work was supported by the National Natural Science Foundation of China (No. 61771062) and the Fund of the State Key Laboratory of IPOC (BUPT), China (No. IPOC2018ZT08).

References

1. P. H. Pathak, X. Feng, P. Hu, and P. Mohapatra, "Visible light communication, networking, and sensing: a survey, potential and challenges," IEEE Commun. Surv. Tutor. **17**, 2047 (2015).
2. N. Chi, Y. Zhou, S. Liang, F. Wang, J. Li, and Y. Wang, "Enabling technologies for high-speed visible light communication employing cap modulation," J. Lightwave Technol. **36**, 510 (2018).
3. Y. Zhou, Y. Wei, F. Hu, J. Hu, Y. Zhao, J. Zhang, F. Jiang, and N. Chi, "Comparison of nonlinear equalizers for high-speed visible light communication utilizing silicon substrate phosphorescent white LED," Opt. Express **28**, 2302 (2020).
4. M. Gao, C. Li, and Z. Xu, "Performance enhancement of LED-based indoor OFDM-VLC system using digital chaotic scheme," Opt. Commun. **439**, 21 (2019).
5. N. Chi and F. Hu, "Nonlinear adaptive filters for high-speed LED based underwater visible light communication [Invited]," Chin. Opt. Lett. **17**, 100011 (2019).
6. H. Elgala, R. Mesleh, and H. Haas, "Indoor optical wireless communication: potential and state-of-the-art," IEEE Commun. Mag. **49**, 56 (2011).
7. J. Armstrong and B. J. Schmidt, "Comparison of asymmetrically clipped optical OFDM and DC-biased optical OFDM in AWGN," IEEE Commun. Lett. **12**, 343 (2008).
8. G. Berardinelli, K. I. Pedersen, T. B. Sorensen, and P. Mogensen, "Generalized DFT-spread-OFDM as 5G waveform," IEEE Commun. Mag. **54**, 99 (2016).
9. S. D. Dissanayake and J. Armstrong, "Comparison of ACO-OFDM, DCO-OFDM and ADO-OFDM in IM/DD systems," J. Lightwave Technol. **31**, 1063 (2013).
10. F. Wang, Y. Liu, F. Jiang, and N. Chi, "High speed underwater visible light communication system based on LED employing maximum ratio combination with multi-pin reception," Opt. Commun. **425**, 106 (2018).
11. Z. Wang, W.-D. Zhong, C. Yu, J. Chen, C. P. Francois, and W. Chen, "Performance of dimming control scheme in visible light communication system," Opt. Express **20**, 18861 (2012).
12. H. Elgala and T. D. Little, "Reverse polarity optical-OFDM (RPO-OFDM): dimming compatible OFDM for gigabit VLC links," Opt. Express **21**, 24288 (2013).
13. Q. Wang, Z. Wang, and L. Dai, "Asymmetrical hybrid optical OFDM for visible light communications with dimming control," IEEE Photon. Technol. Lett. **27**, 974 (2015).
14. Q. Wang, Z. Wang, L. Dai, and J. Quan, "Dimmable visible light communications based on multi-layer ACO-OFDM," IEEE Photon. J. **8**, 7905011 (2016).
15. F. Yang and J. Gao, "Dimming control scheme with high power and spectrum efficiency for visible light communications," IEEE Photon. J. **9**, 7901612 (2017).
16. Y. Sun, F. Yang, and J. Gao, "Novel dimmable visible light communication approach based on hybrid LACO-OFDM," J. Lightwave Technol. **36**, 4942 (2018).
17. J. Zhou, Q. Wang, Q. Cheng, M. Guo, Y. Lu, A. Yang, and Y. Qiao, "Low-PAPR layered/enhanced ACO-SCFDM for optical-wireless communications," IEEE Photon. Technol. Lett. **30**, 165 (2017).
18. T. Zhang, J. Zhou, Z. Zhang, Y. Lu, F. Su, and Y. Qiao, "Dimming control systems based on low-PAPR SCFDM for visible light communications," IEEE Photon. J. **10**, 7907211 (2018).
19. H. Li, Y. Zhang, X. Chen, C. Wu, J. Guo, Z. Gao, and H. Chen, "High-speed phosphorescent white LED visible light communications without utilizing a blue filter," Chin. Opt. Lett. **13**, 080605 (2015).
20. M. S. Moreolo, R. Muñoz, and G. Junyent, "Novel power efficient optical OFDM based on Hartley transform for intensity-modulated direct-detection systems," J. Lightwave Technol. **28**, 798 (2010).
21. J. Zhou, Y. Yan, Z. Cai, Y. Qiao, and Y. Ji, "A cost-effective and efficient scheme for optical OFDM in short-range IM/DD systems," IEEE Photon. Technol. Lett. **26**, 1372 (2014).
22. T. Zhang, Y. Qiao, J. Zhou, Z. Zhang, Y. Lu, and F. Su, "Spectral-efficient L/E-ACO-SCFDM-based dimmable visible light communication system," IEEE Access **7**, 10617 (2019).
23. Q. Wang, C. Qian, X. Guo, Z. Wang, D. G. Cunningham, and I. H. White, "Layered ACO-OFDM for intensity-modulated direct-detection optical wireless transmission," Opt. Express **23**, 12382 (2015).