All-optical amplitude-shift keying and differential phase-shift keying to differential phase amplitude-shift keying format combination in highly nonlinear fiber

Lin Wu (吴 琳), Dechao Zhang (张德朝), Fan Zhang (张 帆)*, Zhangyuan Chen (陈章渊), and Anshi Xu (徐安士)**

State Key Laboratory of Advanced Optical Communication Systems and Networks, Electronics Department, Peking University, Beijing 100871, China

**E-mail: fzhang@pku.edu.cn; **e-mail:chenzhy@pku.edu.cn*

Received November 25, 2008

We propose an all-optical modulation formats combination scheme that merges an amplitude-shift keying (ASK) signal and a differential phase-shift keying (DPSK) signal into a single differential phase amplitude-shift keying (DPASK) signal based on parametric amplification in a highly nonlinear fiber. By optimizing the power of the ASK channel, formats combination of ASK and DPSK to DPASK signal is successfully demonstrated by computational simulation. The demodulation process of the generated DPASK pulses is investigated and the relationship between optical signal-to-noise ratio (OSNR) penalty and the input ASK power is presented. The proposed scheme may be used for increasing spectral efficiency and all-optical logic device.

OCIS codes: 060.2330, 060.2360, 200.3050, 230.1150.

doi: 10.3788/COL20090707.0564.

In recent years, advanced modulation formats have attracted more and more interests as a key technology in high-capacity optical communication system[1,2]. Different kinds of network may use diverse modulation formats to satisfy various requirements such as simplicity, robustness, or spectral efficiency. Since different modulation formats should be transparently used in the forthcoming photonic network, both all-optical format conversion and the combination of different modulation formats will be important interface technologies.

Previously, all-optical format conversions were investigated between non-return-to-zero amplitude-shift keying (NRZ-ASK) and return-to-zero amplitude-shift keying (RZ-ASK)[3,4], or from ASK to phase-shift keying (PSK)[5,6]. Meanwhile, all-optical formats combination schemes have been proposed and demonstrated based on four-wave mixing (FWM)[7−9] or cross-phase modulation (XPM)[10−12] in fiber. All-optical formats combination can increase the spectral efficiency, and has the potential applications for multiplexing and optical label processing[10]. As demonstrated in the presented work, two ASK signals were merged into a single quaternary amplitude-shift keying signal[7]. Multilevel PSK signal has also been generated using combination schemes, such as multiplexing two differential phase-shift keying (DPSK) signals into a differential quadrature phase-shift keying (DQPSK) signal in highly nonlinear fiber (HNLF)[8,9], or combination of DPSK and ASK into DQPSK format[11], and converting two NRZ signals into one DQPSK signal with a RZ probe signal[12]. However, to our knowledge, all-optical combination of ASK and DPSK into differential phase amplitude-shift keying (DPASK) format has not been reported yet.

In this letter, we propose a novel method to combine RZ-DPSK and NRZ-ASK signals into a single DPASK signal via parametric amplification in a HNLF. We demonstrate our idea by simulating simultaneous formats combination and data logic conversion at a speed of 10 Gbit/s. Since the response time of nonlinear Kerr effect in the HNLF is femto-seconds, the combination scheme is believed to have potential for operation at a speed of 100 Gbit/s or even higher. The advantage of this scheme compared with other formats combination schemes mentioned above is the use of conventional of binary receivers while still enhancing spectral efficiency. Furthermore, the DPASK outperforms DQPSK by approximately 2 dB in the nonlinear system in which intrachannel affects do not introduce dominant impairments[13]. Therefore the proposed scheme may be employed in some nonlinear systems.

Figure 1 illustrates the basic idea of the proposed formats combination. RZ-DPSK pulse sequence $S_1(n)$ and NRZ-ASK sequence $S_2(n)$ are synchronously launched into a HNLF. We can write the electrical field strength of $S_1(n)$ as

$$E_1(t) = A(t)\ \exp\{j[w_c t + \phi(t)]\}, \tag{1}$$

where ω_c is the optical carrier angular frequency, and $A(t)$ and $\phi(t)$ stand for the amplitude and phase of signals, respectively. At the time instants $t = nT$, $n = 0, \pm1, \pm2, \cdots$, we have $A(nT) = A_1$ and $\phi(nT) = \phi_n \in \{0, \pi\}$ with the symbol duration T. When the ASK channel S_2(n) transports a bit "one", we have $A(nT) = A_2$ due to parametric amplification in HNLF. Thus the data of $S_2(n)$ is printed on the co-propagating $S_1(n)$ pulse, and DPSK signals are converted into RZ-DPASK signals, which carry simultaneously the information of two input DPSK and ASK channels. At the same time, the data marks in $S_2(n)$ induce an additional ψ-phase shift on $S_1(n)$ data pulses through XPM effect. Therefore, the

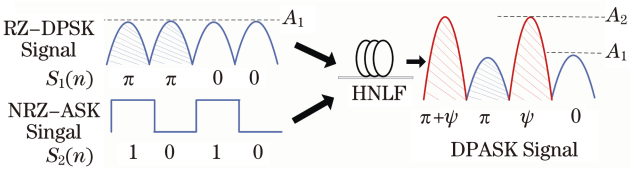

Fig. 1. Schematic illustration of parametric amplification and XPM interaction in combination of DPSK and ASK to DPASK.

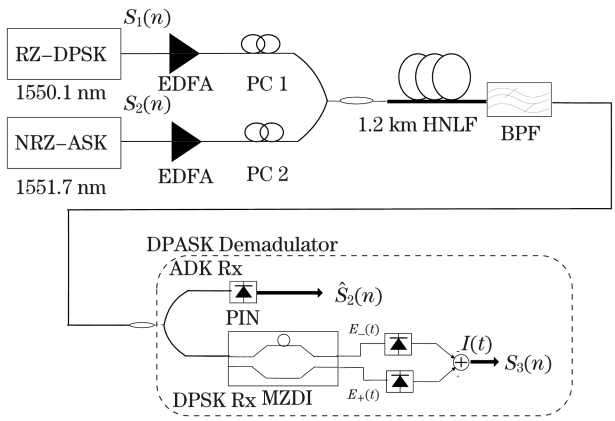

Fig. 2. Schematic setup of DPSK/ASK to DPASK combination and DPASK demodulation.

generated DPASK pulses at the sampling time $t = nT$ can be expressed as

$$E_2(nT) = B_n \exp\{j[\omega_c(nT) + \phi_n + \theta_n]\} = \begin{cases} \mathrm{A}_1 \exp\{j[\omega_c(nT) + \phi_n]\} & S_2(n) = \text{“0”} \\ \mathrm{A}_2 \exp\{j[\omega_c(nT) + \phi_n + \psi]\} & S_2(n) = \text{“1”} \end{cases}, \quad (2)$$

where $B_n \in \{A_1, A_2\}$ and $\theta_n \in \{0, \psi\}$. Note that the plateau shape of NRZ-ASK pulses guarantees to generate chirp-free phase change of the combined DPASK pulses. The DPASK signal can be recovered by direct detector which consists of an ASK and a DPSK receiver[14].

The above method is verified by computational simulation using VPItransmissionMaker 7.5. The setup of formats combination and DPASK demodulation is depicted in Fig. 2. A 10-Gbit/s RZ-DPSK signal S_1(n) with 33% duty cycle are generated at 1550.1 nm and amplified to 2 mW. The synchronized NRZ-ASK signal S_2(n) is generated at 1551.7 nm and amplified to a channel power level of P_{ASK}. Both RZ-DPSK and NRZ-ASK signals are coupled into a 1.2-km HNLF with the same polarizations. The HNLF has a nonlinear coefficient γ of 12 $\mathrm{W}^{-1}\cdot\mathrm{km}^{-1}$, and a zero dispersion wavelength λ_0 at 1545 nm with a dispersion slope $dD/d\lambda$ of 0.016 $\mathrm{ps/nm^2/km}$. The values of these parameters come from commercial Yangtze dispersion shifted fiber in our laboratory. After the HNLF, a second-order Gaussian bandpass filter is used to block the ASK channel and give an output of DPASK pulses at the same wavelength as the input DPSK channel. Both the type and bandwidth of the filter is optimized to minimize the DPASK signal bit-error-rate (BER).

The generated DPASK signal is split into an ASK receiver and a DPSK receiver for demodulation. The estimate decision $\hat{S}_2(n)$ of the ASK receiver is the same as the input ASK channel S_2(n). In the DPSK receiver, the signal at the constructive and destructive ports can be written as

$$\begin{aligned} E_+(t) &= -\frac{1}{2\sqrt{2}}[E_2(t) + E_2(t-T)], \\ E_-(t) &= \frac{j}{2\sqrt{2}}[E_2(t-T) - E_2(t)]. \end{aligned} \quad (3)$$

Both optical signals are fed into separate photodiodes and the output currents are subtracted as

$$I(t) = R(|E_+(t)|^2 - |E_-(t)|^2), \quad (4)$$

where R is the responsivity of the photodiode. The resulting current $I(t)$ at the sampling instants $t = nT$ becomes

$$I(nT) = \frac{R}{2} B_n B_{n-1} \cos[\phi_n - \phi_{n-1} + \theta_n - \theta_{n-1}]. \quad (5)$$

When $\theta_n - \theta_{n-1} = 0$, i.e., S_2(n) = $S_2(n-1)$, from Eq. (5), we can have

$$I(nT) = \begin{cases} \frac{R}{2} A_1^2 \cos(\phi_n - \phi_{n-1}) & S_2(n) = \text{“0”} \\ \frac{R}{2} A_2^2 \cos(\phi_n - \phi_{n-1}) & S_2(n) = \text{“1”} \end{cases}. \quad (6)$$

When $\theta_n - \theta_{n-1} = \pm\psi$, i.e., $S_2(n) \neq S_2(n-1)$, from Eq. (5), we can have

$$\begin{aligned} I(nT) &= \frac{R}{2} A_1 A_2 \cos[\phi_n - \phi_{n-1} \pm \psi] \\ &= \begin{cases} \frac{R}{2} A_1 A_2 \cos\psi & S_2(n) = \text{“0”} \\ -\frac{R}{2} A_1 A_2 \cos\psi & S_2(n) = \text{“1”} \end{cases}. \end{aligned} \quad (7)$$

Since the DPSK receiver estimates the output bit sequence $S_3(n)$ by judging whether the electrical signal in Eq. (5) is positive or negative (binary decision), the sign of $\cos\psi$ has an influence on the output data. From Eq. (7) we have $S_3(n) = S_1(n)$ or $S_3(n) = (S_2(n) \oplus S_2(n-1)) \oplus S_1(n)$, corresponding to the cases that the sign of $\cos\psi$ is positive or negative, respectively.

The values of $S_1(n)$, $S_2(n)$, $S_3(n)$, and $I(nT)$ are shown in Table 1. Therefore the phase information of the DPASK pulses can be detected unambiguously by decision feedback as

$$\hat{S}_1(n) = \begin{cases} S_3(n) & \text{for } \cos\psi > 0 \\ \left(\hat{S}_2(n) \oplus \hat{S}_2(n-1)\right) \oplus S_3(n) & \text{for } \cos\psi < 0 \end{cases}. \quad (8)$$

We can see that Eq. (8) is essential for the demodulation of the combined DPASK signal. Thus the proposed scheme also realizes all-optical logic operation when the sign of $\cos\psi$ is negative.

Table 1. Bit Data of Input and Output Signals

DPSK Bit $S_1(n)$ $(\phi_n - \phi_{n-1})$	ASK Bit $S_2(n)$ (B_n, θ_n)	ASK Bit $S_2(n-1)$ (B_{n-1}, θ_{n-1})	$I(nT)/R$	$S_3(n)$ $\cos\psi > 0$	$S_3(n)$ $\cos\psi < 0$	$\hat{S}_1(n)$
0 (0)	0(A_1,0)	0 (A_1,0)	$A_1^2/2$	0	0	0
0 (0)	0(A_1,0)	1 (A_2,ψ)	$A_1A_2\cos\psi/2$	0	1	0
0 (0)	1(A_2, ψ)	0 (A_1,0)	$A_1A_2\cos\psi/2$	0	1	0
0 (0)	1(A_2, ψ)	1 (A_2,ψ)	$A_2^2/2$	0	0	0
1 (π)	0(A_1,0)	0 (A_1,0)	$-A_1^2/2$	1	1	1
1 (π)	0(A_1,0)	1 (A_2,ψ)	$-A_1A_2\cos\psi/2$	1	0	1
1 (π)	1(A_2, ψ)	0 (A_1,0)	$-A_1A_2\cos\psi/2$	1	0	1
1 (π)	1(A_2, ψ)	1 (A_2,ψ)	$-A_2^2/2$	1	1	1

"0", "1" stand for the logic relationship between the data of input signals ($S_1(n)$, $S_2(n)$, and $S_2(n-1)$) and detected phase information of the DPASK signal ($S_3(n)$).

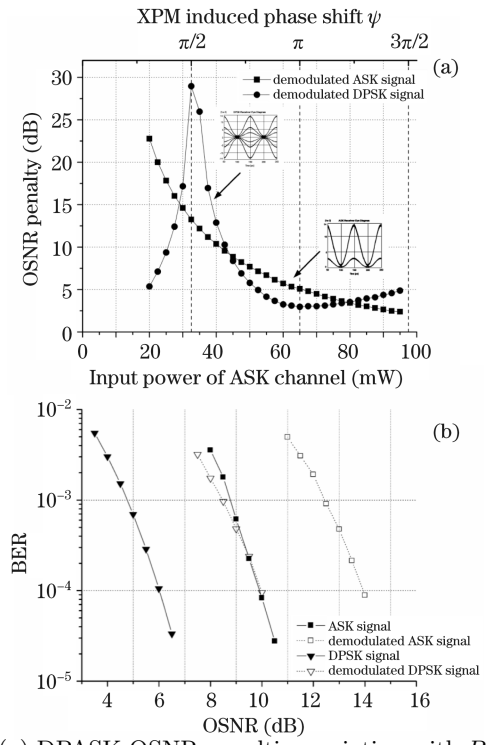

Fig. 3. (a) DPASK OSNR penalties variation with P_{ASK}. Insets: corresponding eye diagrams of the demodulated ASK signal and DPSK signal; (b) BER performance of DPSK, ASK, and DPASK signals as a function of OSNR.

We investigate the influence of the input power P_{ASK} on optical signal-to-noise ratio (OSNR) penalties of the received DPASK signals compared with the original signals. Figure 3(a) shows OSNR penalties at 10^{-3} BER level for a resolution bandwidth of 0.1 nm. As the values of A_2 increases with P_{ASK} due to parametricL amplification, the rise of extinction ratio (ER) A_2^2/A_1^2 results in the OSNR penalty of the ASK signal decreasing. The XPM-induced phase shift ψ associated with P_{ASK} directly subtracts from the π angular separation of the two Binary DPSK states. As the value of ψ gets increased close to but less than $\pi/2$, i.e., the value of $I(nT)$ is close to zero, the

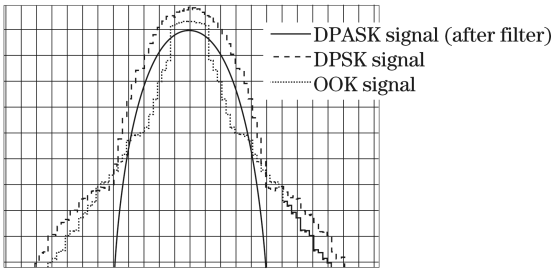

Fig. 4. Spectra of different signals for a resolution bandwidth of 0.1 nm.

performance degrades significantly. As the angle ψ increases beyond $\pi/2$, the logic of decision is changed as expressed in Eq. (8) for $\cos\psi<0$. We recover good performance when ψ increases to π. The corresponding OSNR penalty of the DPSK signal changes as shown in Fig. 3(a). As expected, we observe a trade off between the ASK power requirements for minimizing both DPSK and ASK signal penalties in Fig. 3(a). In our work, we set a power level of $P_{\mathrm{ASK}} = 79.2$ mW which makes the sign of $\cos\psi$ negative. By doing so, the logic information carried by DPASK signals keeps a fixed relation with that of DPSK and ASK as shown in Eq. (8) for $\cos\psi<0$, and the OSNR penalties are minimized for both demodulated ASK and DPSK signals.

With $P_{\mathrm{ASK}} = 79.2$ mW, we get the eye diagrams of DPASK signals at the output of the ASK and DPSK receivers as shown in the insets of Fig. 3(a). In the eye diagram of demodulated ASK signals, the lower and the upper curves correspond to original DPSK pulses and amplified pulses, respectively. In DPSK eye diagram, the demodulated signals have three positive and negative levels, corresponding to the item $I(nT)/R$ in Table 1. We can see that the OSNR penalties of the received ASK and DPSK signals are due to two-level amplitude modulation and multilevel structure resulting from DPASK pulses delay interfering, respectively.

Figure 3(b) shows the BER performance of the input and combined signals as a function of OSNR with $P_{\mathrm{ASK}} = 79.2$ mW using Monte-Carlo simulation. At 10^{-3} BER level, the OSNR penalty of ASK signal is about 3.7 dB,

which is the same value for the DPSK signal, as shown in Fig. 3(a).

The spectra of three signals for a resolution bandwidth of 0.1 nm is shown in Fig. 4. It can be seen that the 3-dB bandwidth of the combined DPASK signal is not broader than that of the DPSK signal. Therefore the spectral efficiency is enhanced as the DPASK format carry two bit per symbol compared to ASK and DPSK format.

We have the expression of ψ and the ER A_2^2/A_1^2 as[15]

$$\psi = 2\gamma L_{\text{eff}} P_{\text{ASK}} = 2\gamma P_{\text{ASK}} \frac{1 - \mathrm{e}^{\alpha L}}{\alpha}, \tag{9}$$

$$G = \frac{A_2^2}{A_1^2} \propto (\gamma P_{\text{ASK}}/g)^2 \sinh^2(gL), \tag{10}$$

where γ, α, and L are the nonlinear coefficient, attenuation, and the length of HNLF, respectively. The parametric gain g is defined as

$$g = \sqrt{(\gamma P_{\text{ASK}})^2 - (\kappa/2)^2}. \tag{11}$$

The net phase mismatch κ can be derived as[16]

$$\kappa = -\frac{2\pi c}{\lambda_0^2} \frac{\mathrm{d}D}{\mathrm{d}\lambda} (\lambda_{\text{p}} - \lambda_0)(\lambda_{\text{p}} - \lambda_{\text{s}}) + 2\gamma P_{\text{ASK}}, \tag{12}$$

where λ_{p} and λ_{s} stand for the wavelength of the NRZ and DPSK signal, respectively. From Eqs. (10)−(12), we can find that $\frac{\mathrm{d}D}{\mathrm{d}\lambda}, \lambda_0, \lambda_p$, and λ_s have impact on the value of κ, which is related with the ER and the simulation result, i.e., the optimal value of P_{ASK}. When the absolute value of κ increases, the ER decreases and the optimal value of P_{ASK} rises. Similarly the parameters γ, α, and L influence the optimal value of P_{ASK}. When either of the value of γ and L is reduced, or the attenuation is higher, the optimal value of P_{ASK} will increase.

In conclusion, an all-optical scheme is proposed to combine NRZ-ASK and RZ-DPSK signals into an RZ-DPASK signal based on parametric amplification in HNLF. The output sequence of the DPSK receiver shows logic operation from the original DPSK data. As a consequence, this scheme has the potential applications not only for enhancing spectral efficiency, but also for all-optical logic gate in future all-optical network.

This work was supported by the National Natural Science Foundation of China (Nos. 60736003 and 60877045) and the National "863" Project of China (Nos. 2006AA01Z253 and 2006AA01Z261). It was also sponsored by the Scientific Research Foundation for the Returned Overseas Chinese Scholars, State Education Ministry. The authors also acknowledge the donation of VPI software suite from Alexander von Humboldt Foundation.

References

1. P. J. Winzer and R.-J. Essiambre, Proc. IEEE **94,** 952 (2006).
2. X. Wang and X. Zhang, Chin. Opt. Lett. **5,** 69 (2007).
3. L. Yin, Y. Yan, Y. Zhou, J. Wu, and J. Lin, Chin. Opt. Lett. **4,** 4 (2006).
4. Y. Yu, X. Zhang, D. Huang, L. Li, and W. Fu, IEEE Photon. Technol. Lett. **19,** 1027 (2007).
5. T. Ye, F. Liu, and Y. Su, Chin. Opt. Lett. **6,** 398 (2008).
6. H. Jiang, H. Wen, L. Han, Y. Guo, and H. Zhang, IEEE Photon. Technol. Lett. **19,** 1985 (2007).
7. M. L. F. Abbade, E. A. M. Fagotto, R. S. Braga, I. E. Fonseca, E. Moschim, and F. R. Barbosa, IEEE Photon. Technol. Lett. **17,** 151 (2005).
8. G. T. Zhou, K. Xu, J. Wu, C. Yan, Y. Su, and J. T. Lin, IEEE Photon. Technol. Lett. **18,** 2389 (2006).
9. G. W. Lu, K. S. Abedin, and T. Miyazaki, IEEE Photon. Technol. Lett. **19,** 1699 (2007).
10. S. H. Lee, K. K. Chow, and C. Shu, in *Proceedings of CLEO* JThE75 (2005).
11. M. Galili, B. Huettl, C. Schmidt-Langhorst, R. Ludwig, F. Futami, S. Watanabe, and C. Schubert, in *Proceedings of OFC* OThI5 (2007).
12. K. Mishina, S. Kitagawa, and A. Maruta, Opt. Express **15,** 8444 (2007).
13. Y. Yadin, M. Orenstein, and M. Shtaif, IEEE J. Sel. Top. Quantum Electron. **12,** 581 (2006).
14. M. Ohm and J. Speidel, IEEE Photon. Technol. Lett. **15,** 159 (2003).
15. G. P. Agrawal, *Nonlinear Fiber Optics* (Academic, San Diego, 2001).
16. P. O. Hedekvist, M. Karlsson, and P. A. Andrekson, J. Lightwave Technol. **15,** 2051 (1997).